FBJ®

Ball & Rolling Bearings

ベアリング

TÜV SÜD

CERTIFIED IQNet MANAGEMENT SYSTEM

ISO 9001 PSB

PCT

FBJ® took over FKC's more than 50 year's accumulation of technology and know-how. FBJ is proud of the production of clutch release bearings and wheel bearings especially, and special bearings will be designed and manufactured in accordance with customers' request.

Since 1950, our experience in bearing manufacturing has been kept us as a leading bearing manufacture. Our position of leadership is maintained through the application of advanced technologies, significant investment in tooling for machining, grinding, assembly and testing, and process control systems.

The reputation FBJ has achieved for quality, cost – effective products has earned us the confidence of customers throughout the world. We are committed to the research and development of new materials, innovative high performance bearings, and continuous improvement of exiting products.

In today's competitive business climate, performance is what sets apart. From bearing design to delivery of a quality product, on-time, at a competitive price, FBJ is committed to being the bearing supplier of choice.

FBJ®

FBJ Bearings i
Contents ii

Section 1 Information

1. Introduction to rolling bearings 1
2. Calculation of service life 3
3. Tolerances 12
4. Fits 21
5. Clearance 25
6. Speed and high temperature suitability 31
7. Bearing material 32
8. Lubrication and storage 33
9. Mounting and dismounting 36
10. Prefixes and suffixes 45

Section 2 Ball / Roller bearing specifications

1. Miniature ball bearings 46
2. Deep groove ball bearings
   - Metric series 62
   - Inch series 71
3. Self-aligning ball bearings 77
4. Angular contact ball bearings 78
5. Four point ball bearings 81
6. Thrust ball bearings
   - Metric series 82
   - Inch series 87
7. Cylindrical roller bearings 88
8. Tapered roller bearings
   - Metric series 92
   - Inch series 100
9. Spherical roller bearings 121
10. Spherical roller thrust bearings 127
11. Needle roller bearings 128

Section 3 Linear motion bearing specifications

1. LM / LME series 139
2. LMF / LMK series 141
3. LMH / SK series 142

Section 4 Rod End specifications

1. PHS series 143
2. POS series 144

3. NHS series 145
4. NOS series 146
5. SI-E series 147
6. SA-E series 148
7. LM / LF series 149
8. Spherical plain bearings
- PB series 150
- PC series 151
- GE series 152
- GE-C series 153
9. Link ball
- BI series 154
- BL series 155

Section 5 Slewing Ring

1. Slewing ring basics 156
2. Slewing ring designation system 159
3. Slewing ring specifications
- 01 series 160
- 11 series 162
- 13 series 163
- HS series 164
- QN / QW series 165

Section 6 Bearing unit / insert and Plummer Block

1. Basic structure of FBJ pillow blocks 166
2. Bearing material and operating temperature 168
3. Lubrication, clearance and speed limits of FBJ pillow blocks 170
4. Bearing life of FBJ pillow block units 172
5. Allowable load for FBJ housing 173
6. Mounting of FBJ pillow block units 176
7. Bearing units / inserts specification 178
8. Bearing and housing matching table 227
9. Basic structure of FBJ plummer block housing 229
10. Materials and matching tolerances 230
11. Plummer block specifications 231

Section 7 Adapter Sleeves specifications 237

Section 8 MB Bushing specifications 244

Section 9 Conversion guide 248

MR Series*
Open

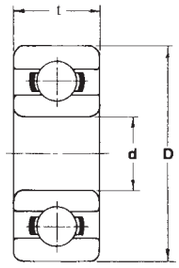

Miniature Ball Bearings

Bearing Number	Equivalent Number	Dimensions (mm)			Basic Load Ratings (N)		Limiting Speeds X 10^3 (rev/min)		Weight (g)
		Bore d	OD D	Width t	C_r	C_{or}	Grease	Oil	
MR31	L-310W51	1.0	3.0	1.5	74	20	130	150	0.05
MR41X	R-412	1.2	4.0	1.8	108	34	110	130	0.10
MR52	L-520W02	2.0	5.0	2.0	167	49	85	100	0.14
MR62	R-620W52	2.0	6.0	2.5	334	98	75	90	0.28
MR72	R-720Y52	2.0	7.0	2.5	383	128	63	75	0.43
MR82X	R-825Y52	2.5	8.0	2.5	559	177	60	67	0.52
MR63	L-630	3.0	6.0	2.0	206	74	71	80	0.20
MR83	R-830Y52	3.0	8.0	2.5	392	137	60	67	0.51
MR93	R-930Y52	3.0	9.0	2.5	569	186	56	67	0.75
MR74	L-740	4.0	7.0	2.0	314	118	60	67	0.23
MR84	L-840	4.0	8.0	2.0	392	137	56	67	0.39
MR104	L-1040	4.0	10.0	3.0	589	206	48	56	0.95
MR85	L-850	5.0	8.0	2.0	304	118	53	63	0.25
MR95	L-950	5.0	9.0	2.5	432	167	50	60	0.54
MR105	L-1050	5.0	10.0	3.0	432	167	50	60	0.91
MR106	L-1060	6.0	10.0	2.5	500	216	45	53	0.55
MR126	L-1260	6.0	12.0	3.0	716	294	43	50	1.25
MR117	L-1170	7.0	11.0	2.5	451	206	43	50	0.59
MR137	L-1370	7.0	13.0	3.0	540	275	40	48	1.52
MR128	L-1280	8.0	12.0	2.5	540	275	40	48	0.70
MR148	L-1480	8.0	14.0	3.5	814	383	38	45	1.90

* All Bearings are available with stainless steel 440C, add prefix “SS”

FBJ®

Miniature Ball Bearings

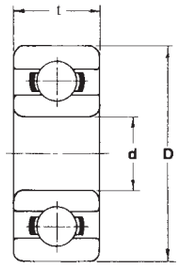

600 Series* Open

Bearing Number	Equivalent Number	Dimensions (mm)			Basic Load Ratings (N)		Limiting Speeds X 10^3 (rev/min)		Weight (g)
		Bore d	OD D	Width t	C_r	C_{or}	Grease	Oil	
601X	R-615	1.5	6	2.5	334	98	75	90	0.31
602	R-725	2.0	7	2.8	383	128	60	71	0.50
602X	R-825	2.5	8	2.8	549	177	60	71	0.61
603	R-930	3.0	9	3.0	569	186	56	67	0.84
604	R-1240	4.0	12	4.0	961	353	48	56	2.19
605	R-1450	5.0	14	5.0	1334	510	40	50	3.46
606	R-1760	6.0	17	6.0	2266	844	38	45	5.94
607	R-1970	7.0	19	6.0	2335	893	36	43	7.80
608	R-2280	8.0	22	7.0	3296	1383	34	40	11.80
609	–	9.0	24	7.0	3335	1422	32	38	14.70

* All Bearings are available with stainless steel 440C, add prefix “SS”

Miniature Ball Bearings

620 Series* Open

Bearing Number	Equivalent Number	Dimensions (mm)			Basic Load Ratings (N)		Limiting Speeds X 10^3 (rev/min)		Weight (g)
		Bore d	OD D	Width t	C_r	C_{or}	Grease	Oil	
623	R-1030	3	10	4	627.8	215.8	50	60	1.45
624	R-1340	4	13	5	1305	490.5	40	48	3.10
625	R-1650	5	16	5	1727	676.9	36	43	4.95
626	R-1960	6	19	6	2335	892.7	32	40	8.12
627	R-2270	7	22	7	3286	1383	30	36	12.70
628	–	8	24	8	3335	1422	28	34	17.10
629	R-2690	9	26	8	4571	1982	28	34	19.00

* All Bearings are available with stainless steel 440C, add prefix “SS”

630 Series*
Open

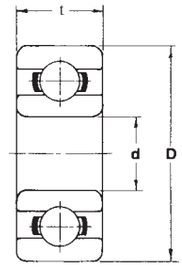

Miniature Ball Bearings

Bearing Number	Equivalent Number	Dimensions (mm)			Basic Load Ratings (N)		Limiting Speeds X 10^3 (rev/min)		Weight (g)
		Bore d	OD D	Width t	C_r	C_{or}	Grease	Oil	
633	–	3	13	5	1305	490.5	40	48	3.27
634	R-1640	4	16	5	1344	519.9	36	43	5.24
635	–	5	19	6	2335	892.7	32	40	8.50
636	–	6	22	7	3335	1422	30	36	13.90
637	–	7	26	9	4571	1982	28	34	24.20
638	–	8	28	9	4571	1982	28	34	28.10
639	–	9	30	10	4660	2080	24	30	36.20

* All Bearings are available with stainless steel 440C, add prefix “SS“

680 Series*
Open

Miniature Ball Bearings

Bearing Number	Equivalent Number	Dimensions (mm)			Basic Load Ratings (N)		Limiting Speeds X 10^3 (rev/min)		Weight (g)
		Bore d	OD D	Width t	C_r	C_{or}	Grease	Oil	
681	L-310	1.0	3	1.0	74	20	130	150	0.03
681X	L-415	1.5	4	1.2	108	34	100	120	0.10
682	L-520	2.0	5	1.5	167	49	85	100	0.15
682X	L-625	2.5	6	1.8	186	59	71	80	0.20
683	L-730	3.0	7	2.0	314	108	63	75	0.32
684	L-940	4.0	9	2.5	638	226	53	63	0.65
685	L-1150	5.0	11	3.0	716	294	45	53	1.16
686	L-1360	6.0	13	3.5	1079	441	40	50	1.87
687	L-1470	7.0	14	3.5	1177	510	40	50	2.03
688	L-1680	8.0	16	4.0	1256	589	36	43	3.11
689	L-1790	9.0	17	4.0	1324	667	36	43	3.41

* All Bearings are available with stainless steel 440C, add prefix “SS”

FBJ®

Miniature Ball Bearings

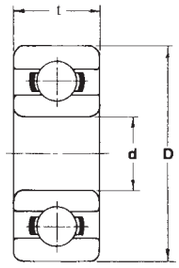

690 Series*
Open

Bearing Number	Equivalent Number	Dimensions (mm)			Basic Load Ratings (N)		Limiting Speeds X 10^3 (rev/min)		Weight (g)
		Bore d	OD D	Width t	C_r	C_{or}	Grease	Oil	
691	R-410	1.0	4	1.6	137	39.2	100	120	0.11
691X	R-515	1.5	5	2.0	167	49.1	85	100	0.20
692	R-620	2.0	6	2.3	334	98.1	75	90	0.28
692X	R-725	2.5	7	2.5	383	128	63	75	0.40
693	R-830	3.0	8	3.0	559	177	60	67	0.60
694	R-1140	4.0	11	4.0	961	353	48	56	1.69
695	R-1350	5.0	13	4.0	1079	432	43	50	2.39
696	R-1560	6.0	15	5.0	1344	520	40	45	3.85
697	–	7.0	17	5.0	1609	716	36	43	5.26
698	–	8.0	19	6.0	2237	922	36	43	7.12
699	L-2090	9.0	20	6.0	2472	1079	34	40	3.38

* All Bearings are available with stainless steel 440C, add prefix “SS”

MR Series*
Double Shielded

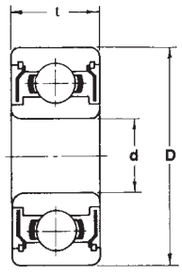

Miniature Ball Bearings

Bearing Number	Equivalent Number	Dimensions (mm)			Basic Load Ratings (N)		Limiting Speeds X 10^3 (rev/min)		Weight (g)
		Bore d	OD D	Width t	C_r	C_{or}	Grease	Oil	
MR41XZZ	–	1.2	4	2.5	108	34	110	130	0.14
MR52ZZ	L-520ZZW52	2.0	5	2.5	167	49	85	100	0.20
MR62ZZ	R-620ZZY52	2.0	6	2.5	334	98	75	90	0.33
MR72ZZ	R-720ZZY03	2.0	7	3.0	383	128	63	75	0.53
MR63ZZ	L-630ZZ	3.0	6	2.5	206	74	71	80	0.28
MR83ZZ	–	3.0	8	3.0	392	137	60	67	0.67
MR93ZZ	R-930ZZY04	3.0	9	4.0	569	186	56	67	1.15
MR74ZZ	L-740ZZ	4.0	7	2.5	255	108	60	67	0.33
MR84ZZ	L-840ZZ	4.0	8	3.0	392	137	56	67	0.56
MR104ZZ	L-1040ZZ	4.0	10	4.0	589	206	48	56	1.33
MR85ZZ	L-850ZZ	5.0	8	2.5	216	88	53	63	0.34
MR95ZZ	L-950ZZ	5.0	9	3.0	432	167	50	60	0.58
MR105ZZ	L-1050ZZ	5.0	10	4.0	432	167	50	60	1.26
MR115ZZ	–	5.0	11	4.0	716	294	45	53	0.62
MR106ZZ	L-1060ZZ	6.0	10	3.0	500	216	45	53	0.70
MR126ZZ	L-1260ZZ	6.0	12	4.0	716	294	43	50	1.66
MR117ZZ	L-1170ZZ	7.0	11	3.0	451	206	43	50	0.71
MR137ZZ	L-1370ZZ	7.0	13	4.0	540	275	40	48	2.01
MR128ZZ	L-1280ZZ	8.0	12	3.5	540	275	40	48	0.99
MR148ZZ	L-1480ZZ	8.0	14	4.0	814	383	38	45	2.19

* All Bearings are available with stainless steel 440C, add prefix “SS”

FBJ®

Miniature Ball Bearings

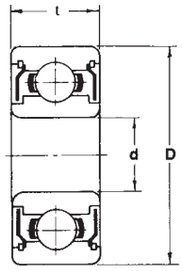

600 Series*
Double Shielded

Bearing Number	Equivalent Number	Dimensions (mm)			Basic Load Ratings (N)		Limiting Speeds X 10^3 (rev/min)		Weight (g)
		Bore d	OD D	Width t	C_r	C_{or}	Grease	Oil	
601XZZ	R-615ZZ	1.5	6	3.0	334	98	75	90	0.40
602ZZ	R-720ZZ	2.0	7	3.5	383	128	60	71	0.60
620XZZ	R-825ZZ	2.5	8	4.0	549	177	60	71	0.85
603ZZ	R-930ZZ	3.0	9	5.0	569	186	56	67	1.43
604ZZ	R-1240ZZ	4.0	12	4.0	961	353	48	56	2.34
605ZZ	R-1450ZZ	5.0	14	5.0	1334	510	40	50	3.75
606ZZ	R-1760ZZ	6.0	17	6.0	2266	844	38	45	6.89
607ZZ	R-1970ZZ	7.0	19	6.0	2335	893	36	43	8.24
608ZZ	R-2280ZZ	8.0	22	7.0	3296	1383	34	40	12.90
609ZZ	–	9.0	24	7.0	3335	1422	32	38	16.00

* All Bearings are available with stainless steel 440C, add prefix “SS”

Please indicate ‘-2RS’ behind the basic number, instead of ‘ZZ’ if you are looking for both side rubber seal bearing.

Miniature Ball Bearings

620 Series*
Double Shielded

Bearing Number	Equivalent Number	Dimensions (mm)			Basic Load Ratings (N)		Limiting Speeds X 10^3 (rev/min)		Weight (g)
		Bore d	OD D	Width t	C_r	C_{or}	Grease	Oil	
623ZZ	R-1030ZZ	3	10	4	628	216	50	60	1.65
624ZZ	R-1340ZZ	4	13	5	1305	491	40	48	3.20
625ZZ	R-1650ZZ	5	16	5	1727	677	36	43	5.10
626ZZ	R-1960ZZ	6	19	6	2335	893	32	40	8.65
627ZZ	R-2270ZZ	7	22	7	3286	1383	30	36	13.10
628ZZ	–	8	24	8	3335	1422	28	34	18.50
629ZZ	R-2690ZZ	9	26	8	4571	1982	28	34	21.80

* All Bearings are available with stainless steel 440C, add prefix “SS”

Please indicate ‘-2RS’ behind the basic number, instead of ‘ZZ’ if you are looking for both side rubber seal bearing.

630 Series*
Double Shielded

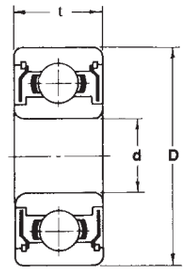

Miniature Ball Bearings

Bearing Number	Equivalent Number	Dimensions (mm)			Basic Load Ratings (N)		Limiting Speeds X 10^3 (rev/min)		Weight (g)
		Bore d	OD D	Width t	C_r	C_{or}	Grease	Oil	
633ZZ	–	3	13	5	1305	491	40	48	3.43
634ZZ	R-1640ZZ	4	16	5	1344	520	36	43	5.44
635ZZ	–	5	19	6	2335	893	32	40	8.89
636ZZ	–	6	22	7	3335	1422	30	36	14.50
637ZZ	–	7	26	9	4571	1982	28	34	25.80
638ZZ	–	8	28	9	4571	1982	28	34	30.30
639ZZ	–	9	30	10	4660	2080	24	30	37.10

Please indicate '-2RS' behind the basic number, instead of 'ZZ' if you are looking for both side rubber seal bearing.

680 Series*
Double Shielded

Miniature Ball Bearings

Bearing Number	Equivalent Number	Dimensions (mm)			Basic Load Ratings (N)		Limiting Speeds X 10^3 (rev/min)		Weight (g)
		Bore d	OD D	Width t	C_r	C_{or}	Grease	Oil	
681XZZ	L-415ZZ	1.5	4	2.0	108	34	100	120	0.14
682ZZ	L-520ZZ	2.0	5	2.3	167	49	85	100	0.20
682XZZ	L-625ZZ	2.5	6	2.6	186	59	71	80	0.35
683ZZ	L-730ZZ	3.0	7	3.0	314	108	63	75	0.45
684ZZ	L-940ZZ	4.0	9	4.0	638	226	53	63	1.00
685ZZ	L-1150ZZ	5.0	11	5.0	716	294	45	53	1.93
686ZZ	L-1360ZZ	6.0	13	5.0	1079	441	40	50	2.68
687ZZ	L-1470ZZ	7.0	14	5.0	1177	510	40	50	2.95
688ZZ	L-1680ZZ	8.0	16	5.0	1256	589	36	43	4.05
689ZZ	L-1790ZZ	9.0	17	5.0	1324	667	36	43	4.38

* All Bearings are available with stainless steel 440C, add prefix "SS"

Please indicate '-2RS' behind the basic number, instead of 'ZZ' if you are looking for both side rubber seal bearing.

FBJ®

Miniature Ball Bearings

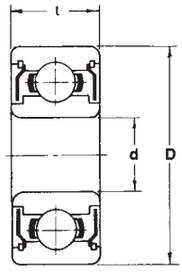

690 Series*
Double Shielded

Bearing Number	Equivalent Number	Dimensions (mm)			Basic Load Ratings (N)		Limiting Speeds X 10^3 (rev/min)		Weight (g)
		Bore d	OD D	Width t	C_r	C_{or}	Grease	Oil	
691XZZ	R-515ZZ	1.5	5	2.6	167	49	85	100	0.25
692ZZ	R-620ZZ	2.0	6	3.0	334	98	75	90	0.35
692XZZ	R-725ZZ	2.5	7	3.5	383	128	63	75	0.55
693ZZ	R-830ZZ	3.0	8	4.0	559	177	60	67	0.80
694ZZ	R-1140ZZ	4.0	11	4.0	961	353	48	56	1.75
695ZZ	R-1350ZZ	5.0	13	4.0	1079	432	43	50	2.31
696ZZ	R-1560ZZ	6.0	15	5.0	1344	520	40	45	3.65
697ZZ	–	7.0	17	5.0	1609	716	36	43	5.01
698ZZ	–	8.0	19	6.0	2237	922	36	43	7.57
699ZZ	L-2090ZZ	9.0	20	6.0	2472	1079	34	40	8.54

* All Bearings are available with stainless steel 440C, add prefix “SS”

Please indicate ‘-2RS’ behind the basic number, instead of ‘ZZ’ if you are looking for both side rubber seal bearing.

MF Series*
Flanged, Open

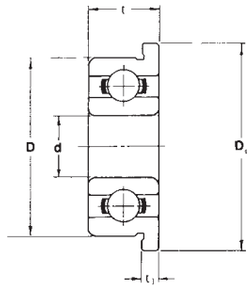

Miniature Ball Bearings

Bearing Number	Equivalent Number	Dimensions (mm)					Basic Load Ratings (N)		Limiting Speeds X 10^3 (rev/min)		Weight (g)
		Bore d	OD D	Width t	Flange Dia. D_1	Flange Width t_1	C_r	C_{or}	Grease	Oil	
MF41X	–	1.2	4	1.8	4.8	0.4	108	34	110	130	0.12
MF52	LF-520W02	2.0	5	2.0	6.2	0.6	167	49	85	100	0.19
MF62	RF-620W52	2.0	6	2.5	7.2	0.6	334	98	75	90	0.34
MF72	RF-720Y52	2.0	7	2.5	8.2	0.6	383	128	63	75	0.50
MF82X	RF-825Y52	2.5	8	2.5	9.2	0.6	559	177	60	67	0.60
MF63	LF-630	3.0	6	2.0	7.2	0.6	206	74	71	80	0.26
MF83	RF-830Y52	3.0	8	2.5	9.2	0.6	392	137	60	67	0.59
MF93	RF-930Y52	3.0	9	2.5	10.6	0.6	569	186	56	67	0.83
MF74	LF-740	4.0	7	2.0	8.2	0.6	314	118	60	67	0.30
MF84	LF-840	4.0	8	2.0	9.2	0.6	392	137	56	67	0.47
MF104	LF-1040	4.0	10	3.0	11.2	0.6	589	206	48	56	1.04
MF85	LF-850	5.0	8	2.0	9.2	0.6	304	118	53	63	0.33
MF95	LF-950	5.0	9	2.5	10.2	0.6	432	167	50	60	0.62
MF105	LF-1050	5.0	10	3.0	11.6	0.6	431	167	50	60	1.00
MF106	LF-1060	6.0	10	2.5	11.2	0.6	500	216	45	53	0.64
MF126	LF-1260	6.0	12	3.0	13.6	0.6	716	294	43	50	1.44
MF117	LF-1170	7.0	11	2.5	12.2	0.6	451	206	43	50	0.69
MF137	LF-1370	7.0	13	3.0	14.2	0.6	540	275	40	48	1.64
MF128	LF-1280	8.0	12	2.5	13.6	0.6	540	275	40	48	0.81
MF148	LF-1480	8.0	14	3.5	15.6	0.8	814	383	38	45	2.13

* All Bearings are available with stainless steel 440C, add prefix “SS”

FBJ®

Miniature Ball Bearings

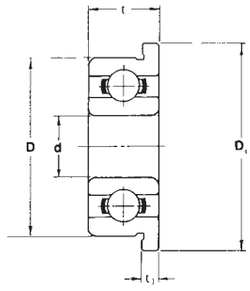

600 Series*
Flanged, Open

Bearing Number	Equivalent Number	Dimensions (mm)					Basic Load Ratings (N)		Limiting Speeds X 10^3 (rev/min)		Weight (g)
		Bore d	OD D	Width t	Flange Dia. D_1	Flange Width t_1	C_r	C_{or}	Grease	Oil	
F601X	RF-615	1.5	6	2.5	7.5	0.6	334	98	75	90	0.38
F602	RF-720	2.0	7	2.8	8.5	0.7	383	128	60	71	0.60
F602X	RF-825	2.5	8	2.8	9.5	0.7	549	177	60	71	0.72
F603	RF-930	3.0	9	3.0	10.5	0.7	569	186	56	67	0.96
F604	RF-1240	4.0	12	4.0	13.5	1.0	961	353	48	56	2.42
F605	RF-1450	5.0	14	5.0	16.0	1.0	1334	510	40	50	3.83
F606	RF-1760	6.0	17	6.0	19.0	1.2	2266	844	38	45	6.47
F607	RF-1970	7.0	19	6.0	22.0	1.5	2335	893	36	43	8.93
F608	RF-2280	8.0	22	7.0	25.0	1.5	3296	1383	34	40	13.10
F609	–	9.0	24	7.0	27.0	1.5	3335	1422	32	38	16.10

* All Bearings are available with stainless steel 440C, add prefix “SS”

Miniature Ball Bearings

620 Series*
Flanged, Open

Bearing Number	Equivalent Number	Dimensions (mm)					Basic Load Ratings (N)		Limiting Speeds X 10^3 (rev/min)		Weight (g)
		Bore d	OD D	Width t	Flange Dia. D_1	Flange Width t_1	C_r	C_{or}	Grease	Oil	
F623	RF-1030	3	10	4	11.5	1.0	628	216	50	60	1.65
F624	RF-1340	4	13	5	15.0	1.0	1305	491	40	48	3.44
F625	RF-1650	5	16	5	18.0	1.0	1727	677	36	43	5.37
F626	RF-1960	6	19	6	22.0	1.5	2335	893	32	40	9.25
F627	RF-2270	7	22	7	25.0	1.5	3286	1383	30	36	14.00

* All Bearings are available with stainless steel 440C, add prefix “SS”

630 Series*
Flanged, Open

Miniature Ball Bearings

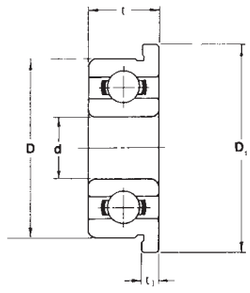

Bearing Number	Equivalent Number	Dimensions (mm)					Basic Load Ratings (N)		Limiting Speeds X 10^3 (rev/min)		Weight (g)
		Bore d	OD D	Width t	Flange Dia. D_1	Flange Width t_1	C_r	C_{or}	Grease	Oil	
F634	RF-1640	4	16	5	18	1.0	1344	520	36	43	5.66
F635	–	5	19	6	22	1.5	2335	893	32	40	9.26

* All Bearings are available with stainless steel 440C, add prefix “SS”

680 Series*
Flanged, Open

Miniature Ball Bearings

Bearing Number	Equivalent Number	Dimensions (mm)					Basic Load Ratings (N)		Limiting Speeds X 10^3 (rev/min)		Weight (g)
		Bore d	OD D	Width t	Flange Dia. D_1	Flange Width t_1	C_r	C_{or}	Grease	Oil	
F681	LF-310	1.0	3	1.0	3.8	0.3	74	20	130	150	0.04
F681X	LF-415	1.5	4	1.2	5.0	0.4	108	34	100	120	0.12
F682	LF-520	2.0	5	1.5	6.1	0.5	167	49	85	100	0.19
F682X	LF-625	2.5	6	1.8	7.1	0.5	186	59	71	80	0.24
F683	LF-730	3.0	7	2.0	8.1	0.5	314	108	63	75	0.37
F684	LF-940	4.0	9	2.5	10.3	0.6	638	226	53	63	0.74
F685	LF-1150	5.0	11	3.0	12.5	0.8	716	284	45	53	1.33
F686	LF-1360	6.0	13	3.5	15.0	1.0	1079	441	40	50	2.21
F687	LF-1470	7.0	14	3.5	16.0	1.0	1177	510	40	50	2.40
F688	LF-1680	8.0	16	4.0	18.0	1.0	1256	589	36	43	3.53
F689	LF-1790	9.0	17	4.0	19.0	1.0	1324	667	36	43	3.85

* All Bearings are available with stainless steel 440C, add prefix “SS”

FBJ®

Miniature Ball Bearings

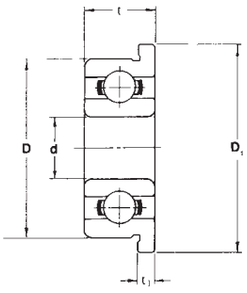

690 Series*
Flanged, Open

Bearing Number	Equivalent Number	Dimensions (mm)					Basic Load Ratings (N)		Limiting Speeds X 10^3 (rev/min)		Weight (g)
		Bore d	OD D	Width t	Flange Dia. D_1	Flange Width t_1	C_r	C_{or}	Grease	Oil	
F691	RF-410	1.0	4	1.6	5.0	0.5	137	39	100	120	0.14
F691X	RF-515	1.5	5	2.0	6.5	0.6	167	49	85	100	0.26
F692	RF-620	2.0	6	2.3	7.5	0.6	334	98	75	90	0.35
F692X	RF-725	2.5	7	2.5	8.5	0.7	383	128	63	75	0.50
F693	RF-830	3.0	8	3.0	9.5	0.7	559	177	60	67	0.71
F694	RF-1140	4.0	11	4.0	12.5	1.0	961	353	48	56	1.91
F695	RF-1350	5.0	13	4.0	15.0	1.0	1079	432	43	50	2.73
F696	RF-1560	6.0	15	5.0	17.0	1.2	1344	520	40	45	4.24
F697	–	7.0	17	5.0	19.0	1.2	1609	716	36	43	5.79
F698	–	8.0	19	6.0	22.0	1.5	2237	922	36	43	8.25
F699	LF-2090	9.0	20	6.0	23.0	1.5	2472	1079	34	40	9.57

* All Bearings are available with stainless steel 440C, add prefix “SS”

MF Series*
Flanged, Double Shielded

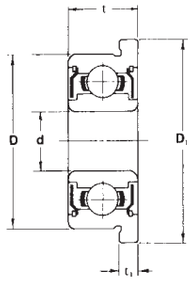

Miniature Ball Bearings

Bearing Number	Equivalent Number	Dimensions (mm)					Basic Load Ratings (N)		Limiting Speeds X 10^3 (rev/min)		Weight (g)
		Bore d	OD D	Width t	Flange Dia. D_1	Flange Width t_1	C_r	C_{or}	Grease	Oil	
MF52ZZ	LF-520ZZW52	2	5	2.5	6.2	0.6	167	49	85	100	0.25
MF72ZZ	RF-720ZZY03	2	7	3.0	8.2	0.6	383	128	63	75	0.60
MF63ZZ	LF-630ZZ	3	6	2.5	7.2	0.6	206	74	71	80	0.34
MF93ZZ	RFR-930ZZY04	3	9	4.0	10.6	0.8	569	186	56	67	1.30
MF74ZZ	LF-740ZZ	4	7	2.5	8.2	0.6	255	108	60	67	0.40
MF84ZZ	LF-840ZZ	4	8	3.0	9.2	0.6	392	137	56	67	0.64
MF104ZZ	LF-1040ZZ	4	10	4.0	11.6	0.8	589	206	48	56	1.50
MF85ZZ	LF-850ZZ	5	8	2.5	9.2	0.6	216	88	53	63	0.42
MF95ZZ	LF-950ZZ	5	9	3.0	10.2	0.6	432	167	50	60	0.66
MF105ZZ	LF-1050ZZ	5	10	4.0	11.6	0.8	432	167	50	60	1.38
MF115ZZ	–	5	11	4.0	12.6	0.8	716	284	45	53	0.81
MF106ZZ	LF-1060ZZ	6	10	3.0	11.2	0.6	500	216	45	53	0.79
MF126ZZ	LF-1260ZZ	6	12	4.0	13.6	0.8	716	294	43	50	1.86
MF117ZZ	LF-1170ZZ	7	11	3.0	12.2	0.6	451	206	43	50	0.81
MF137ZZ	LF-1370ZZ	7	13	4.0	14.6	0.8	540	275	40	48	2.17
MF128ZZ	LF-1280ZZ	8	12	3.5	13.6	0.8	540	275	40	48	1.14
MF148ZZ	LF-1480ZZ	8	14	4.0	15.6	0.8	814	383	38	45	2.42

* All Bearings are available with stainless steel 440C, add prefix “SS”

FBJ®

Miniature Ball Bearings

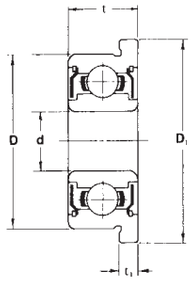

600 Series*
Flanged, Double Shielded

Bearing Number	Equivalent Number	Dimensions (mm)					Basic Load Ratings (N)		Limiting Speeds X 10^3 (rev/min)		Weight (g)
		Bore d	OD D	Width t	Flange Dia. D_1	Flange Width t_1	C_r	C_{or}	Grease	Oil	
F601XZZ	RF-615ZZ	1.5	6	3.0	7.5	0.8	334	98	75	90	0.50
F602ZZ	RF-720ZZ	2.0	7	3.5	8.5	0.9	383	128	60	71	0.73
F602XZZ	RF-825ZZ	2.5	8	4.0	9.5	0.9	549	177	60	71	0.99
F603ZZ	RF-930ZZ	3.0	9	5.0	10.5	1.0	569	186	56	67	1.61
F604ZZ	RF-1240ZZ	4.0	12	4.0	13.5	1.0	961	353	48	56	2.57
F605ZZ	RF-1450ZZ	5.0	14	5.0	16.0	1.0	1334	510	40	50	4.12
F606ZZ	RF-1760ZZ	6.0	17	6.0	19.0	1.2	2266	844	38	45	7.42
F607ZZ	RF-1970ZZ	7.0	19	6.0	22.0	1.5	2335	893	36	43	9.37
F608ZZ	RF-2280ZZ	8.0	22	7.0	25.0	1.5	3296	1383	34	40	14.20
F609ZZ	–	9.0	24	7.0	27.0	1.5	3335	1422	32	38	17.40

* All Bearings are available with stainless steel 440C, add prefix “SS”

Miniature Ball Bearings

620 Series*
Flanged, Double Shielded

Bearing Number	Equivalent Number	Dimensions (mm)					Basic Load Ratings (N)		Limiting Speeds X 10^3 (rev/min)		Weight (g)
		Bore d	OD D	Width t	Flange Dia. D_1	Flange Width t_1	C_r	C_{or}	Grease	Oil	
F623ZZ	RF-1030ZZ	3	10	4	11.5	1.0	628	216	50	60	1.85
F624ZZ	RF-1340ZZ	4	13	5	15.0	1.0	1305	491	40	48	3.54
F625ZZ	RF-1650ZZ	5	16	5	18.0	1.0	1727	677	36	43	5.52
F626ZZ	RF-1960ZZ	6	19	6	22.0	1.5	2335	893	32	40	9.78
F627ZZ	RF-2270ZZ	7	22	7	25.0	1.5	3286	1383	30	36	14.40

* All Bearings are available with stainless steel 440C, add prefix “SS”

630 Series*
Flanged, Double Shielded

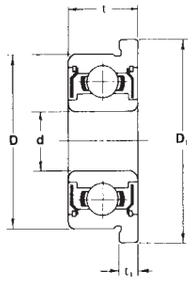

Miniature Ball Bearings

Bearing Number	Equivalent Number	Dimensions (mm)					Basic Load Ratings (N)		Limiting Speeds X 10^3 (rev/min)		Weight (g)
		Bore d	OD D	Width t	Flange Dia. D_1	Flange Width t_1	C_r	C_{or}	Grease	Oil	
F634ZZ	RF-1640ZZ	4	16	5	18	1.0	1344	520	36	43	5.86
F635ZZ	–	5	19	6	22	1.5	2335	893	32	40	9.65

* All Bearings are available with stainless steel 440C, add prefix “SS”

680 Series*
Flanged, Double Shielded

Miniature Ball Bearings

Bearing Number	Equivalent Number	Dimensions (mm)					Basic Load Ratings (N)		Limiting Speeds X 10^3 (rev/min)		Weight (g)
		Bore d	OD D	Width t	Flange Dia. D_1	Flange Width t_1	C_r	C_{or}	Grease	Oil	
F681XZZ	LF-415ZZ	1.5	4	2.0	5.0	0.6	108	34	100	120	0.17
F682ZZ	LF-520ZZ	2.0	5	2.3	6.1	0.6	167	49	85	100	0.24
F682XZZ	LF-625ZZ	2.5	6	2.6	7.1	0.8	186	59	71	80	0.42
F683ZZ	LF-730ZZ	3.0	7	3.0	8.1	0.8	314	108	63	75	0.53
F684ZZ	LF-940ZZ	4.0	9	4.0	10.3	1.0	638	226	53	63	1.15
F685ZZ	LF-1150ZZ	5.0	11	5.0	12.5	1.0	716	284	45	53	2.15
F686ZZ	LF-1360ZZ	6.0	13	5.0	15.0	1.1	1079	441	40	50	3.06
F687ZZ	LF-1470ZZ	7.0	14	5.0	16.0	1.1	1177	510	40	50	3 .35
F688ZZ	LF-1680ZZ	8.0	16	5.0	18.0	1.1	1256	589	36	43	4.51
F689ZZ	–	9.0	17	5.0	19.0	1.1	1324	667	36	43	4.87

* All Bearings are available with stainless steel 440C, add prefix “SS”

FBJ®

Miniature Ball Bearings

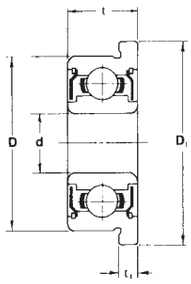

690 Series*
Flanged, Double Shielded

Bearing Number	Equivalent Number	Dimensions (mm)					Basic Load Ratings (N)		Limiting Speeds X 10^3 (rev/min)		Weight (g)
		Bore d	OD D	Width t	Flange Dia. D_1	Flange Width t_1	C_r	C_{or}	Grease	Oil	
F691XZZ	RF-515ZZ	1.5	5	2.6	6.5	0.8	167	49	85	100	0.33
F692ZZ	RF-620ZZ	2.0	6	3.0	7.5	0.8	334	98	75	90	0.45
F692XZZ	RF-725ZZ	2.5	7	3.5	8.5	0.9	383	128	63	75	0.68
F693ZZ	RF-830ZZ	3.0	8	4.0	9.5	0.9	559	177	60	67	0.94
F694ZZ	RF-1140ZZ	4.0	11	4.0	12.5	1.0	961	353	48	56	1.97
F695ZZ	RF-1350ZZ	5.0	13	4.0	15.0	1.0	1079	432	43	50	2.65
F696ZZ	RF-1560ZZ	6.0	15	5.0	17.0	1.2	1344	520	40	45	4.04
F697ZZ	–	7.0	17	5.0	19.0	1.2	1609	716	36	43	5.54
F698ZZ	**–**	8.0	19	6.0	22.0	1.5	2237	922	36	43	8.70
F699ZZ	LF-2090ZZ	9.0	20	5.0	23.0	1.5	2472	1079	34	40	9.73

* All Bearings are available with stainless steel 440C, add prefix “SS”

6000 Series

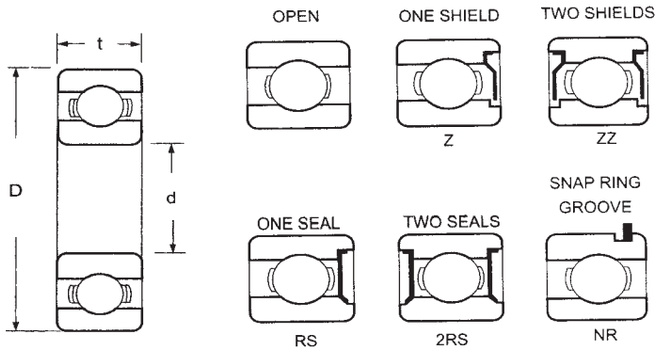

Deep Groove Ball Bearings

Bearing Number	Dimensions (mm)			Basic Load Ratings (N)		Limiting Speeds (rev/min)		Weight kg
	Bore d	OD D	Width t	*Cr*	*Cor*	Grease	Oil	
6000*	10	26	8	4620	1960	30000	36000	0.019
6001*	12	28	8	5070	2360	26000	32000	0.022
6002*	15	32	9	5590	2850	22000	28000	0.030
6003*	17	35	10	6050	3250	19000	24000	0.039
6004*	20	42	12	9360	5000	17000	20000	0.069
6005*	25	47	12	11200	6550	15000	18000	0.080
6006*	30	55	13	13300	8300	12000	15000	0.120
6007*	35	62	14	15900	10200	10000	13000	0.160
6008*	40	68	15	16800	11600	9500	12000	0.190
6009*	45	75	16	20800	14600	8000	11000	0.250
6010*	50	80	16	21600	16000	8500	10000	0.260
6011*	55	90	18	28100	21200	7500	9000	0.390
6012*	60	95	18	29600	23200	6700	8000	0.420
6013	65	100	18	30700	25000	6300	7500	0.440
6014	70	110	20	37700	31000	6000	7000	0.600
6015	75	115	20	39700	33500	5600	6700	0.640
6016	80	125	22	47500	40000	5300	6300	0.850
6017	85	130	22	49400	43000	5000	6000	0.890
6018	90	140	24	58500	50000	4800	5600	1.150
6019	95	145	24	60500	54000	4500	5300	1.200
6020	100	150	24	60500	54000	4300	5000	1.250
6021	105	160	26	72500	65500	4000	4800	1.600
6022	110	170	28	84500	73000	3800	4500	1.970
6024	120	180	28	88000	79500	3600	4300	2.670
6026	130	200	33	106000	101000	3200	3800	3.920
6028	140	210	33	110000	109000	3000	3600	4.150
6030	150	225	35	126000	126000	2800	3200	4.480
6032	160	240	38	137000	135000	2600	3000	5.890
6034	170	260	42	161000	160000	2400	2800	7.920
6036	180	280	46	174000	180000	2300	2700	10.300
6038	190	290	46	188000	200000	2100	2500	10.800
6040	200	310	51	202000	222000	2000	2400	13.900

*The bearing is available in 440 c stainless steel, add prefix “SS”

FBJ®

Deep Groove Ball Bearings

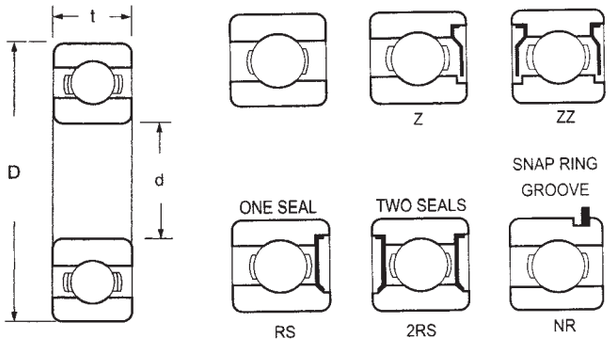

6200 Series

Bearing Number	Dimensions (mm)			Basic Load Ratings (N)		Limiting Speeds (rev/min)		Weight kg
	Bore d	OD D	Width t	*Cr*	*Cor*	Grease	Oil	
6200*	10	30	9	5070	2360	24000	30000	0.032
6201*	12	32	10	6890	3100	22000	28000	0.037
6202*	15	35	11	7800	3750	19000	24000	0.045
6203*	17	40	12	9560	4750	17000	20000	0.065
6204*	20	47	14	12700	6550	15000	18000	0.110
6205*	25	52	15	14000	7800	12000	15000	0.130
6206*	30	62	16	19500	11200	10000	13000	0.200
6207*	35	72	17	25500	15300	9000	11000	0.290
6208*	40	80	18	30700	19000	8500	10000	0.370
6209*	45	85	19	33200	21600	7500	9000	0.410
6210*	50	90	20	35100	23200	7000	8500	0.460
6211*	55	100	21	43600	29000	6300	7500	0.610
6212*	60	110	22	47500	32500	6000	7000	0.780
6213	65	120	23	55900	40500	5300	6300	0.990
6214	70	125	24	60500	45000	5000	6000	1.050
6215	75	130	25	66300	49000	4800	5600	1.200
6216	80	140	26	70200	55000	4500	5300	1.400
6217	85	150	28	83200	64000	4300	5000	1.800
6218	90	160	30	95600	73200	3800	4500	2.150
6219	95	170	32	10800	81500	3600	4300	2.600
6220	100	180	34	124000	93000	3400	4000	3.150
6221	105	190	36	133000	105000	3100	3700	3.79
6222	110	200	38	144000	117000	2800	3400	4.45
6224	120	215	40	155000	131000	2600	3200	5.29
6226	130	230	40	167000	146000	2400	3000	5.96
6228	140	250	42	166000	150000	2500	2900	7.47
6230	150	270	45	176000	168000	2300	2700	9.41
6232	160	290	48	185000	186000	2100	2500	14.30
6234	170	310	52	212000	224000	2000	2400	17.50
6236	180	320	52	227000	242000	1900	2200	18.30
6238	190	340	55	255000	282000	1800	2100	23.00
6240	200	360	58	268000	310000	1700	2000	28.20

*The bearing is available in 440 c stainless steel, add prefix “SS”

6300 Series

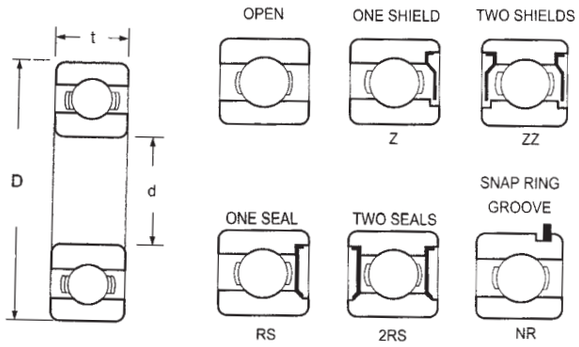

Deep Groove Ball Bearings

Bearing Number	Dimensions (mm)			Basic Load Ratings (N)		Limiting Speeds (rev/min)		Weight kg
	Bore d	OD D	Width t	*Cr*	*Cor*	Grease	Oil	
6300*	10	35	11	8060	3400	20000	26000	0.053
6301*	12	37	12	9750	4150	19000	24000	0.060
6302*	15	42	13	11400	5400	17500	22000	0.088
6303*	17	47	14	13500	6550	16000	19000	0.120
6304*	20	52	15	15900	7800	13000	16000	0.140
6305*	25	62	17	22500	11600	11000	14000	0.230
6306*	30	72	19	28100	16000	9000	11000	0.350
6307*	35	80	21	33200	19000	8500	10000	0.460
6308*	40	90	23	41000	24000	7500	9000	0.630
6309*	45	100	25	52700	31500	6700	8000	0.830
6310*	50	110	27	61800	38000	6300	7500	1.050
6311*	55	120	29	71500	45000	5600	6700	1.350
6312	60	130	31	81900	52000	5000	6000	1.700
6313	65	140	33	92300	60000	4800	5600	2.100
6314	70	150	35	104000	68000	4500	5300	2.500
6315	75	160	37	114000	76500	4300	5000	3.000
6316	80	170	39	123000	86500	4000	4800	3.65
6317	85	180	41	132000	97100	3800	4500	4.28
6318	90	190	43	143000	106500	3600	4300	4.98
6319	95	200	45	153000	119000	3100	3600	5.76
6320	100	215	47	173000	141200	2800	3400	7.04
6321	105	225	49	184000	153000	3000	3600	8.05
6322	110	240	50	205000	179000	2900	3400	9.54
6324	120	260	55	207000	185000	2600	3100	14.60
6326	130	280	58	229000	214000	2400	2800	18.20
6328	140	300	62	253000	246000	2200	2600	21.80
6330	150	320	65	274000	284000	2100	2400	26.20
6332	160	340	68	278000	287000	1900	2300	28.60
6334	170	360	72	325000	355000	1800	2100	34.00
6336	180	380	75	325000	360000	1700	2000	41.90
6338	190	400	78	355000	415000	1600	1900	48.20
6340	200	420	80	380000	445000	1500	1800	54.60

*The bearing is available in 440 c stainless steel, add prefix “SS”

FBJ®

Deep Groove Ball Bearings

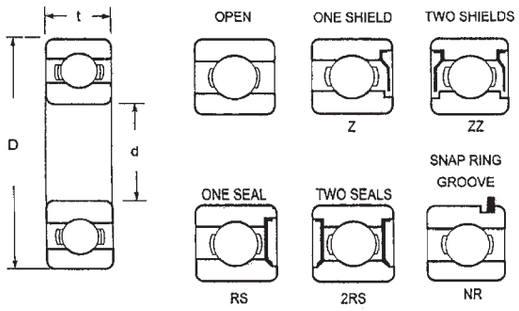

6400 Series

Bearing Number	Dimensions (mm)			Basic Load Ratings (kN)		Limiting Speeds (rev/min)		Weight kg
	Bore d	OD D	Width t	*Cr*	*Cor*	Grease	Oil	
6403	17	62	17	22.7	10.8	11000	15000	0.268
6404	20	72	19	31.0	15.2	9500	13000	0.399
6405	25	80	21	38.2	19.2	8500	11000	0.528
6406	30	90	23	47.5	24.5	8000	10000	0.710
6407	35	100	25	56.8	29.5	6700	8500	0.926
6408	40	110	27	65.5	37.5	6300	8000	1.22
6409	45	120	29	77.5	45.5	5600	7000	1.52
6410	50	130	31	81.5	52.0	5300	6300	1.85
6411	55	140	33	93.0	60.0	5000	6000	2.38
6412	60	150	35	104.0	68.0	4600	5500	2.89
6413	65	160	37	116.2	78.8	4300	5200	3.30
6414	70	180	42	143.0	103.2	3900	4600	4.83
6415	75	190	45	153.5	114.0	3600	4400	5.87
6416	80	200	48	164.0	124.5	3400	4100	6.84

Deep Groove Ball Bearings

6700 Series

Bearing Number	Dimensions (mm)			Basic Load Ratings (N)		Limiting Speeds x 10^3 (rev/min)		Weight kg
	Bore d	OD D	Width t	*Cr*	*Cor*	Grease	Oil	
6700	10	15	3	853	432	15000	17000	1.4
6701	12	18	4	922	530	13000	15000	3.1
6702	15	21	4	942	579	11000	13000	3.6
6703	17	23	4	1001	657	9500	11000	4.0
6704	20	27	4	1040	726	8500	10000	5.9
6705	25	32	4	1089	844	7000	8000	7.1
6706	30	37	4	1148	952	5500	7000	8.3
6707	35	44	5	1864	1638	4900	6000	15.0
6708	40	50	6	2521	2237	4300	5000	23.0
6709	45	55	6	2580	2403	3900	4600	25.0

FBJ®

6800 Series

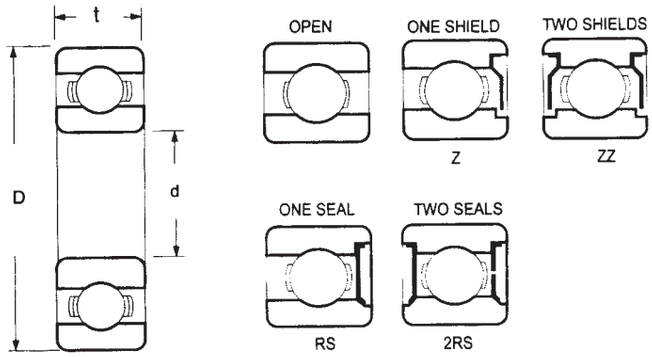

Deep Groove Ball Bearings

Bearing Number	Dimensions (mm)			Basic Load Ratings (N)		Limiting Speeds (rev/min)		Weight kg
	Bore d	OD D	Width t	*Cr*	*Cor*	Grease	Oil	
6800*	10	19	5	1380	585	37000	43000	0.0055
6801*	12	21	5	1430	670	33000	39000	0.0063
6802*	15	24	5	1560	800	28000	33000	0.0074
6803*	17	26	5	1680	930	26000	30000	0.0082
6804*	20	32	7	2700	1500	21000	25000	0.018
6805*	25	37	7	4360	2600	18000	21000	0.022
6806*	30	42	7	4490	2900	15000	18000	0.027
6807*	35	47	7	4750	3200	13000	16000	0.030
6808*	40	52	7	4940	3450	12000	14000	0.034
6809*	45	58	7	6050	4300	11000	13000	0.040
6810*	50	65	7	6240	4750	10000	12000	0.052
6811*	55	72	9	8320	6200	8500	10000	0.083
6812*	60	78	10	8710	6700	80000	9500	0.110
6813	65	85	10	11700	9150	7500	8500	0.130
6814	70	90	10	12100	12700	7000	8000	0.140
6815	75	95	10	12500	13900	6500	7500	0.150
6816	80	100	10	12700	14500	6000	7000	0.150
6817	85	110	13	18700	20000	5500	6500	0.270
6818	90	115	13	19000	21000	5300	6200	0.280
6819	95	120	13	19300	22000	5000	6000	0.300
6820	100	125	13	19600	23000	4600	5500	0.310
6821	105	130	13	19800	23900	4800	5600	0.324
6822	110	140	16	28100	32500	4300	5300	0.497
6824	120	150	16	28900	35500	4000	4800	0.537
6826	130	165	18	37000	44000	3600	4300	0.758
6828	140	175	18	38500	48000	3400	4000	0.832
6830	150	190	20	47500	58500	3200	3800	1.15
6832	160	200	20	48500	61000	2600	3200	1.23
6834	170	215	22	60000	75000	2600	3000	1.86
6836	180	225	22	60500	78500	2400	2800	1.98
6838	190	240	24	73000	93500	2200	2600	2.53
6840	200	250	24	74000	98000	2200	2600	2.67
6844	220	270	24	76500	107000	1900	2400	2.9
6848	240	300	28	98500	137000	1700	2000	4.48
6852	260	320	28	101000	148000	1600	1900	4.48
6052		400	65	291000	375000	1400	1700	29.4
6856	280	350	33	133000	191000	1500	1700	7.2
6860	300	380	38	166000	233000	1300	1600	10.3
6864	320	400	38	168000	244000	1300	1500	10.8
6868	340	420	38	175000	265000	1200	1400	11.5
6872	360	440	38	192000	290000	1100	1300	11.8
6876	380	480	46	238000	375000	1000	1200	19.5
6880	400	500	46	241000	390000	950	1200	20.5
6884	420	520	46	245000	410000	900	1100	21.4
6888	440	540	46	248000	425000	900	1100	22.3
6892	460	580	56	310000	550000	800	1000	34.3
6896	480	600	56	315000	575000	800	950	35.4
68/500	500	620	56	320000	600000	750	900	37.2
68/530	530	650	56	325000	625000	710	850	39.8
68/560	560	680	56	330000	650000	670	800	41.5
68/600	600	730	60	355000	735000	600	710	50.9
68/630	630	780	69	420000	890000	560	670	71.3
68/670	670	820	69	435000	965000	500	630	75.4
68/710	710	870	74	480000	1100000	480	560	92.6
68/750	750	920	78	525000	1260000	430	530	110
68/800	800	980	82	530000	1310000	400	480	132
68/900	900	1090	85	611000	1449000	390	460	160
68/1000	1000	1220	100	749000	1909000	360	420	245
68/1120	1120	1360	106	880000	2456000	340	400	331
68/1320	1320	1600	122	953000	2834000	320	380	500
68/1400	1400	1700	132	1278000	3999000	300	360	567

*The bearing is available in 440 c stainless steel, add prefix “SS”

FBJ®

Deep Groove Ball Bearings

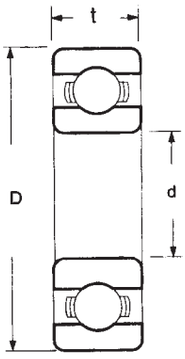

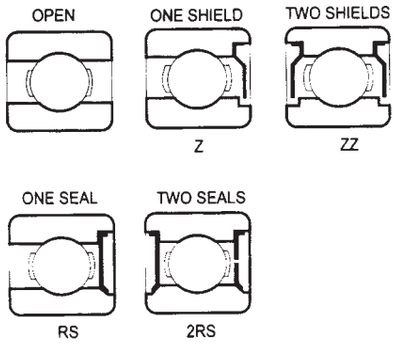

6900 Series

Bearing Number	Dimensions (mm)			Basic Load Ratings (N)		Limiting Speeds (rev/min)		Weight kg
	Bore d	OD D	Width t	*Cr*	*Cor*	Grease	Oil	
6900*	10	22	6	1950	750	34000	41000	0.010
6901*	12	24	6	2250	980	31000	36000	0.011
6902*	15	28	7	4030	2040	26000	30000	0.016
6903*	17	30	7	4360	2320	23000	28000	0.018
6904*	20	37	9	6370	3650	19000	23000	0.038
6905*	25	42	9	6630	4000	16000	19000	0.045
6906*	30	47	9	7280	4550	14000	17000	0.051
6907*	35	55	10	9560	6200	12000	14000	0.080
6908*	40	62	12	13800	9300	11000	13000	0.120
6909*	45	68	12	10100	6700	10700	12000	0.140
6910*	50	72	12	14600	10400	9500	11000	0.140
6911*	55	80	13	15900	11400	8000	9000	0.190
6912*	60	85	13	16500	12000	7500	8500	0.200
6913	65	90	13	17400	13400	7000	8000	0.220
6914	70	100	16	23800	18300	6500	7500	0.350
6915	75	105	16	24200	19300	6200	7200	0.370
6916	80	110	16	25100	20400	5500	6500	0.400
6917	85	120	18	31900	30000	52500	6300	0.550
6918	90	125	18	33200	31500	5000	6000	0.590
6919	95	130	18	33800	33500	4700	5500	0.610
6920	100	140	20	42300	41500	4400	5300	0.830

*The bearing is available in 440 c stainless steel, add prefix “SS”

16000 Series

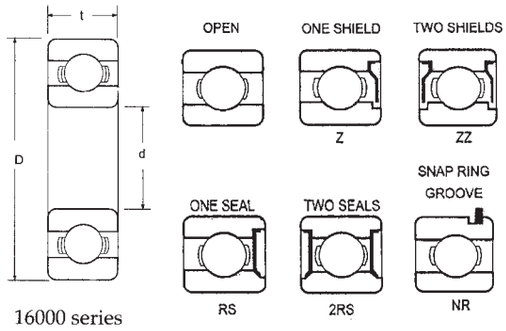

Deep Groove Ball Bearings

Bearing Number	Dimensions (mm)			Basic Load Ratings (N)		Limiting Speeds (rev/min)		Weight kg
	Bore d	OD D	Width t	*Cr*	*Cor*	Grease	Oil	
16100	10	28	8	4620	1960	28000	34000	0.023
16001	12	28	7	5070	2360	26000	32000	0.019
16002	15	32	8	5590	2850	22000	28000	0.025
16003	17	35	8	6050	3250	19000	24000	0.032
16004	20	42	8	6890	4050	17000	20000	0.050
16005	25	47	8	7610	4750	14000	17000	0.060
16006	30	55	9	11200	7350	12000	15000	0.085
16007	35	62	9	12400	8150	10000	13000	0.110
16008	40	68	9	13300	9150	9500	12000	0.130
16009	45	75	10	15600	10800	9000	11000	0.170
16010	50	80	10	16300	11400	8500	10000	0.180
16011	55	90	11	19500	14000	7500	9000	0.260
16012	60	95	11	19900	15000	6700	8000	0.280
16013	65	100	11	21200	16600	6300	7500	0.300
16014	70	110	13	28100	25000	6000	7000	0.430
16015	75	115	13	28600	27000	5600	6700	0.460

62200 Series

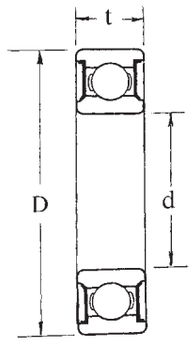

Deep Groove Ball Bearings

Bearing Number	Dimensions (mm)			Basic Load Ratings (N)		Limiting Speeds (rev/min)	Weight kg
	Bore d	OD D	Width t	*Cr*	*Cor*		
62200-2RS	10	30	14	3.7	1.7	14,500	0.042
62201-2RS	12	32	14	4.9	2.7	14,000	0.046
62202-2RS	15	35	14	5.5	3.2	12,500	0.056
62203-2RS	17	40	16	6.9	4.0	11,000	0.085
62204-2RS	20	47	18	9.8	6.1	9,500	0.128
62205-2RS	25	52	18	10.5	6.8	8,300	0.146
62206-2RS	30	62	20	14.7	9.8	7,000	0.242
62207-2RS	35	72	23	19.4	12.7	6,000	0.435
62208-2RS	40	80	23	20.6	14.2	5,100	0.450
62209-2RS	45	85	23	22.5	15.6	4,700	0.485
62210-2RS	50	90	23	24.5	18.1	4,300	0.535

FBJ®

Deep Groove Ball Bearings

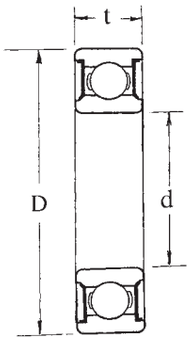

63000 Series

Bearing Number	Dimensions (mm)			Basic Load Ratings (N)		Limiting Speeds (rev/min)	Weight kg
	Bore d	OD D	Width t	*Cr*	*Cor*	Grease	
63000-2RS	10	26	12	360	185	17,500	0.028
63001-2RS	12	28	12	390	215	15,500	0.032
63002-2RS	15	32	13	440	260	13,500	0.042
63003-2RS	17	35	14	470	290	11,500	0.051
63004-2RS	20	42	16	730	460	10,000	0.088
63005-2RS	25	47	16	780	530	8900	0.100
63006-2RS	30	55	19	1040	740	7500	0.159
63007-2RS	35	62	20	1200	910	6600	0.210
63008-2RS	40	68	21	1280	1010	6000	0.259
63009-2RS	45	75	23	1600	1330	5300	0.345
63010-2RS	50	80	23	1690	1430	5000	0.370

Deep Groove Ball Bearings

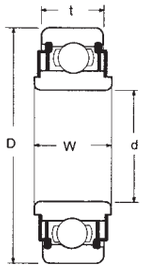

88000 series

88000 Series

Bearing Number	Dimensions (mm)				Basic Load Ratings (N)		Weight kg
	d	D	t	W	*Cr*	*Cor*	
88011	11	32	10	15.400	1050	595	0.099
88501	12	32	10	15.400	1050	595	0.095
88013	13	32	10	15.400	1050	595	0.091
88014	14	35	11	14.399	1340	775	0.111
88502	15	35	11	14.399	1340	775	0.108
88016	16	35	11	17.000	1980	1200	0.188
88503	17	40	12	16.601	1660	985	0.150
88504	20	47	14	17.750	2220	1410	0.232
88505	25	52	15	16.749	2430	1610	0.287

Double Row 4200 Series

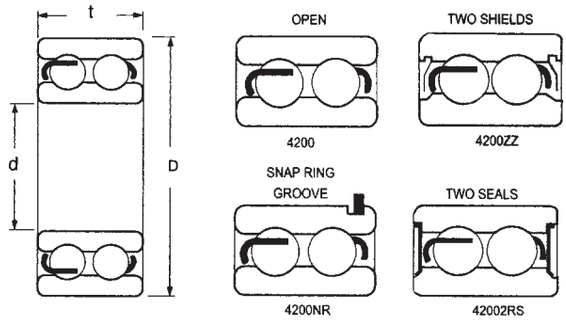

Deep Groove Ball Bearings

Bearing Number	Dimensions (mm)			Basic Load Ratings (N)		Limiting Speeds (rev/min)		Weight kg
	Bore d	OD D	Width t	*Cr*	*Cor*	Grease	Oil	
4200	10	30	14	9230	5200	18000	22000	0.049
4201	12	32	14	10600	6200	17000	20000	0.053
4202	15	35	14	11900	7500	14000	17000	0.059
4203	17	40	16	14800	9500	12000	15000	0.09
4204	20	47	18	17800	12500	10000	13000	0.14
4205	25	52	18	19000	14600	9000	11000	0.16
4206	30	62	20	26000	20800	8000	9500	0.26
4207	35	72	23	35100	28500	6700	8000	0.4
4208	40	80	23	37100	32500	6000	7000	0.5
4209	45	85	23	39000	36000	5600	6700	0.54
4210	50	90	23	41000	40000	5000	6000	0.58
4211	55	100	25	44900	44000	4800	5600	0.8
4212	60	110	28	57200	55000	4500	5300	1.1
4213	65	120	31	67600	67000	4000	4800	1.45
4214	70	125	31	70200	73500	3600	4300	1.5
4215	75	130	31	72800	80000	3400	4000	1.6

4300 Series

Deep Groove Ball Bearings

Bearing Number	Dimensions (mm)			Basic Load Ratings (N)		Limiting Speeds (rev/min)		Weight kg
	Bore d	OD D	Width t	*Cr*	*Cor*	Grease	Oil	
4300	10	35	17	14300	8750	8600	17500	0.091
4301	12	37	17	14700	9200	8100	16000	0.1
4302	15	42	17	15300	9130	13000	17000	0.12
4303	17	47	19	20500	13200	11000	17000	0.16
4304	20	52	21	24300	16000	9500	13000	0.21
4305	25	62	24	32900	22400	8000	10000	0.34
4306	30	72	27	41000	30600	6700	8500	0.5
4307	35	80	31	53200	38200	6300	8000	0.69
4308	40	90	33	65100	47900	5600	7000	0.95
4309	45	100	36	74800	60000	4800	6000	1.25
4310	50	110	40	92600	75500	4300	5300	1.7
4311	55	120	43	10800	88500	4000	5000	2.15
4312	60	130	46	125000	104000	3600	4500	2.65
4313	65	140	48	134000	113000	3600	4500	3.25
4314	70	150	51	152000	131000	3200	4500	3.95
4315	75	160	55	176000	154000	3000	3800	5.38

FBJ®

Deep Groove Ball Bearings

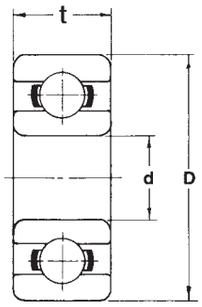

Inch Series* Open

Bearing Number	Equivalent Number	Dimensions (mm)						Basic Load Ratings (N)		Limiting Speeds X 10 (rev/min)		Weight (g)
		Bore d		OD D		Width t		C_r	C_{or}	Grease	Oil	
		inch	mm	inch	mm	inch	mm					
R0	RI-2 1/2	3/64	1.191	5/32	3.967	1/16	1.588	108	34	110	130	0.10
R1	RI-3	7/128	1.397	3/16	4.762	5/64	1.984	235	69	90	110	0.15
R1-4	RI-4	5/64	1.984	1/4	6.350	3/32	2.380	284	98	67	80	0.40
R133	RI-3332	3/32	2.380	3/16	4.762	1/16	1.588	186	59	80	95	0.10
R1-5	RI-5	3/32	2.380	5/16	7.938	7/64	2.779	549	177	60	71	0.60
R144	RI-418	1/8	3.175	1/4	6.350	3/32	2.380	314	108	67	80	0.27
R2-5	RI-518	1/8	3.175	5/16	7.938	7/64	2.779	559	177	60	67	0.50
R2-6	RI-618	1/8	3.175	3/8	9.525	7/64	2.779	638	226	53	63	0.96
R2	R2	1/8	3.175	3/8	9.525	5/32	3.967	628	216	56	67	1.04
R2A	–	1/8	3.175	1/2	12.700	11/64	4.366	638	226	53	63	3.30
R155	R1-5532	5/32	3.967	5/16	7.938	7/64	2.779	363	147	53	63	0.51
R156	RI-5632	3/16	4.762	5/16	7.938	7/64	2.779	363	147	53	63	0.40
R166	RI-6632	3/16	4.762	3/8	9.525	1/8	3.175	706	275	50	60	0.81
R3	R-3	3/16	4.762	1/2	12.700	5/32	3.967	1305	491	43	53	2.21
R3A	–	3/16	4.762	5/8	15.875	25/128	4.978	1481	618	38	45	4.75
R168	RI-614	1/4	6.350	3/8	9.525	1/8	3.175	373	177	48	56	0.57
R188	RI-814	1/4	6.350	1/2	12.700	1/8	3.175	1079	441	40	50	1.60
R4	R-4	1/4	6.350	5/8	15.875	25/128	4.978	1481	618	38	45	4.46
R4A	RI-1214	1/4	6.350	3/4	19.050	7/32	5.558	2335	893	36	43	7.48
R1810	RI-8516	5/16	7.938	1/2	12.700	5/32	3.967	540	275	40	48	1.39
R6	RI-1438	3/8	9.525	7/8	22.225	7/32	5.558	3335	1422	32	38	9.02
R8	RI-1812	1/2	12.700	1 1/8	28.575	1/4	6.350	5111	2413	27	32	11.60
R10	–	5/8	15.875	1 3/8	34.925	9/32	7.142	5994	3286	21	25	23.50
R12	–	3/4	19.050	1 5/8	41.275	5/16	7.938	7907	4483	17	21	53.10
R14	–	7/8	22.225	1 7/8	47.625	3/8	9.252	9000	5400	14	19	71.00
R16	–	1	25.400	2	50.800	3/8	9.525	10200	6200	12	17	85.00
R18	–	1 1/8	28.575	2 1/8	53.975	3/8	9.525	11800	7200	11	16	90.00
R20	–	1 1/4	31.750	2 1/4	57.150	3/8	9.525	12900	8500	10	15	95.00
R22	–	1 3/8	34.925	2 1/2	63.500	7/16	11.112	14000	9800	9	13	120.00
R24	–	1 1/2	38.100	2 5/8	66.675	7/16	11.112	16000	11000	8	12	150.00

* All Bearings are available with stainless steel 440C, add prefix “SS”

Inch Series*
Double Shielded

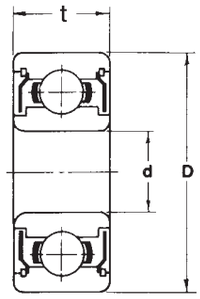

Deep Groove
Ball Bearings

Bearing Number	Equivalent Number	Dimensions (mm)						Basic Load Ratings (N)		Limiting Speeds X 10 (rev/min)		Weight (g)
		Bore d		OD D		Width t		C_r	C_{or}	Grease	Oil	
		inch	mm	inch	mm	inch	mm					
R0ZZ	RI-$2^1/_2$ZZ	$^3/_{64}$	1.191	$^5/_{32}$	3.967	$^3/_{32}$	2.380	108	34	110	130	0.15
R1ZZ	RI-3ZZ	$^7/_{128}$	1.397	$^3/_{16}$	4.762	$^7/_{64}$	2.779	235	69	90	110	0.19
R1-4ZZ	RI-4ZZ	$^5/_{64}$	1.984	$^1/_4$	6.350	$^9/_{64}$	3.571	284	98	67	80	0.53
R133ZZ	RI-3332ZZ	$^3/_{32}$	2.380	$^3/_{16}$	4.762	$^3/_{32}$	2.380	147	54	80	95	0.15
R1-5ZZ	RI-5ZZ	$^3/_{32}$	2.380	$^5/_{16}$	7.938	$^9/_{64}$	3.571	549	177	60	71	1.15
R144ZZ	RI-418ZZ	$^1/_8$	3.175	$^1/_4$	6.350	$^7/_{64}$	2.779	314	108	67	80	0.32
R2-5ZZ	RI-518ZZ	$^1/_8$	3.175	$^5/_{16}$	7.938	$^9/_{64}$	3.571	559	177	60	67	0.74
R2-6ZZ	RI-618ZZ	$^1/_8$	3.175	$^3/_8$	9.525	$^9/_{64}$	3.571	638	226	53	63	1.23
77R2	RI-2ZZ	$^1/_8$	3.175	$^3/_8$	9.525	$^5/_{32}$	3.967	628	216	56	67	1.37
77R2A	–	$^1/_8$	3.175	$^1/_2$	12.700	$^{11}/_{64}$	4.366	638	226	53	63	3.30
R155ZZ	R1-5532ZZ	$^5/_{32}$	3.967	$^5/_{16}$	7.938	$^1/_8$	3.175	363	147	53	63	0.61
R156ZZ	RI-5632ZZ	$^3/_{16}$	4.762	$^5/_{16}$	7.938	$^1/_8$	3.175	363	147	53	63	0.45
R166ZZ	RI-6632ZZ	$^3/_{16}$	4.762	$^3/_8$	9.525	$^1/_8$	3.175	706	275	50	60	0.85
77R3	RI-3ZZ	$^3/_{16}$	4.762	$^1/_2$	12.700	$^{25}/_{128}$	4.978	1305	491	43	53	2.95
77R3A	–	$^3/_{16}$	4.762	$^5/_8$	15.875	$^{25}/_{128}$	4.978	1481	618	38	45	5.08
R168ZZ	RI-614ZZ	$^1/_4$	6.350	$^3/_8$	9.525	$^1/_8$	3.175	38	18	48	56	0.60
R188ZZ	RI-814ZZ	$^1/_4$	6.350	$^1/_2$	12.700	$^3/_{16}$	4.762	1079	441	40	50	2.32
77R4	RI-4ZZ	$^1/_4$	6.350	$^5/_8$	15.875	$^{25}/_{128}$	4.978	1481	618	38	45	4.54
77R4A	RI-1214ZZ	$^1/_4$	6.350	$^3/_4$	19.050	$^9/_{32}$	7.142	2335	893	36	43	10.00
R1810ZZ	RI-8516ZZ	$^5/_{16}$	7.938	$^1/_2$	12.700	$^5/_{32}$	3.967	540	275	40	48	1.57
77R6	RI-1438ZZ	$^3/_8$	9.525	$^7/_8$	22.225	$^9/_{32}$	7.142	3335	1422	32	38	11.70
77R8	RI-1812ZZ	$^1/_2$	12.700	$1^1/_8$	28.575	$^5/_{16}$	7.938	5111	2413	27	32	24.10
77R10	–	$^5/_8$	15.875	$1^3/_8$	34.925	$^{11}/_{32}$	8.733	5994	3286	21	25	38.10
77R12	–	$^3/_4$	19.050	$1^5/_8$	41.275	$^7/_{16}$	11.113	7907	4483	17	21	69.30
77R14	–	$^7/_8$	22.225	$1^7/_8$	47.625	$^1/_2$	12.700	9000	5400	14	19	85.00
77R16	–	1	25.400	2	50.800	$^1/_2$	12.700	10200	6200	12	17	101.00
77R18	–	$1^1/_8$	28.575	$2^1/_8$	53.975	$^1/_2$	12.700	11800	7200	11	16	109.00
77R20	–	$1^1/_4$	31.750	$2^1/_4$	57.150	$^1/_2$	12.700	12900	8500	10	15	118.00
77R22	–	$1^3/_8$	34.925	$2^1/_2$	63.50	$^9/_{16}$	14.288	14000	9800	9	13	145.00
77R24	–	$1^1/_2$	38.100	$2^5/_8$	66.675	$^9/_{16}$	14.288	16000	11000	8	12	178.00

* All Bearings are available with stainless steel 440C, add prefix “SS”

If you are looking for both side rubber seal bearing, Please indicate “99” instead of “77” as the prefix or “2RS” instead of “ZZ” as the suffix

FBJ®

Deep Groove Ball Bearings

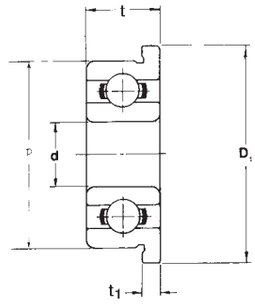

Inch Series* Flanged, Open

Bearing Number	Dimensions (mm)								Basic Load Ratings (N)		Limiting Speeds X 10^3 (rev/min)		Weight (g)
	Bore d		OD D		Width t		Flange Dia. D_1	Flange Width t_1	C_r	C_{or}	Grease	Oil	
	inch	mm	inch	mm	inch	mm							
FR0	3/64	1.191	5/32	3.967	1/16	1.588	5.156	0.330	108	34	110	130	0.12
FR1	7/128	1.397	3/16	4.762	5/64	1.984	5.944	0.584	235	69	90	110	0.19
FR1-4	5/64	1.984	1/4	6.350	3/32	2.380	7.518	0.584	284	98	67	80	0.46
FR133	3/32	2.380	3/16	4.762	1/16	1.588	5.944	0.457	186	59	80	95	0.13
FR1-5	3/32	2.380	5/16	7.938	7/64	2.779	9.119	0.584	549	177	60	71	0.67
FR144	1/8	3.175	1/4	6.350	3/32	2.380	7.518	0.584	314	108	67	80	0.33
FR2-5	1/8	3.175	5/16	7.938	7/64	2.779	9.119	0.584	559	177	60	67	0.57
FR2-6	1/8	3.175	3/8	9.525	7/64	2.779	10.719	0.584	638	226	53	63	1.05
FR2	1/8	3.175	3/8	9.525	5/32	3.967	11.176	0.762	628	216	56	67	1.20
FR155	5/32	3.967	5/16	7.938	7/64	2.779	9.119	0.584	363	147	53	63	0.58
FR156	3/16	4.762	5/16	7.938	7/64	2.779	9.119	0.584	363	147	53	63	0.47
FR166	3/16	4.762	3/8	9.525	1/8	3.175	10.719	0.584	706	275	50	60	0.90
FR3	3/16	4.762	1/2	12.700	25/128	4.978	14.351	1.067	1305	491	43	53	2.50
FR168	1/4	6.350	3/8	9.525	1/8	3.175	10.719	0.584	373	177	48	56	0.66
FR188	1/4	6.350	1/2	12.700	1/8	3.175	13.894	0.584	1079	441	40	50	1.71
FR4	1/4	6.350	5/8	15.875	25/128	4.978	17.526	1.067	1481	618	38	45	4.82
FR1810	5/16	7.938	1/2	12.700	5/32	3.967	13.894	0.787	540	275	40	48	1.54
FR6	3/8	9.525	7/8	22.225	7/32	5.558	24.613	1.575	3335	1422	32	38	9.71
FR8	1/2	12.700	1 1/8	28.575	1/4	6.350	31.120	1.575	5111	2413	27	32	13.00

* All Bearings are available with stainless steel 440C, add prefix “SS”

Inch Series*
Flanged, Double Shielded

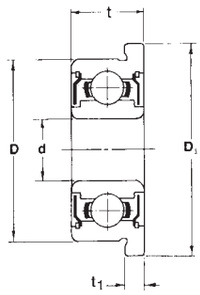

Deep Groove Ball Bearings

Bearing Number	Dimensions (mm)								Basic Load Ratings (N)		Limiting Speeds X 10^3 (rev/min)		Weight (g)
	Bore d		OD D		Width t		Flange Dia. D_1	Flange Width t_1	C_r	C_{or}	Grease	Oil	
	inch	mm	inch	mm	inch	mm							
FR0ZZ	3/64	1.191	5/32	3.967	3/32	2.380	5.156	0.787	108	34	110	130	0.20
FR1ZZ	7/128	1.397	3/16	4.762	7/64	2.779	5.944	0.787	235	69	90	110	0.25
FR1-4ZZ	5/64	1.984	1/4	6.350	9/64	3.571	7.518	0.787	284	98	67	80	0.61
FR133ZZ	3/32	2.380	3/16	4.762	3/32	2.380	5.944	0.787	147	54	80	95	0.21
FR1-5ZZ	3/32	2.380	5/16	7.938	9/64	3.571	9.119	0.787	549	177	60	71	1.25
FR144JZZ	1/8	3.175	1/4	6.350	7/64	2.779	7.518	0.787	314	108	67	80	0.40
FR144ZZ	1/8	3.175	1/4	6.350	7/64	2.779	7.518	0.787	284	98	67	80	0.48
FR2-5ZZ	1/8	3.175	5/16	7.938	9/64	3.571	9.119	0.787	559	177	60	67	0.84
FR2-6ZZ	1/8	3.175	3/8	9.525	9/64	3.571	10.719	0.787	638	226	53	63	1.35
FR2ZZ	1/8	3.175	3/8	9.525	5/32	3.967	11.176	0.762	628	216	56	67	1.53
FR155ZZ	5/32	3.967	5/16	7.938	1/8	3.175	9.119	0.914	363	147	53	63	0.72
FR156ZZ	3/16	4.762	5/16	7.938	1/8	3.175	9.119	0.914	363	147	53	63	0.56
FR166ZZ	3/16	4.762	3/8	9.525	1/8	3.175	10.719	0.787	706	275	50	60	0.97
FR3ZZ	3/16	4.762	1/2	12.700	25/128	4.978	14.351	1.067	1305	491	43	53	3.24
FR168ZZ	1/4	6.350	3/8	9.525	1/8	3.175	10.719	0.914	373	177	48	56	0.73
FR188ZZ	1/4	6.350	1/2	12.700	3/16	4.762	13.894	1.143	1079	441	40	50	2.54
FR4ZZ	1/4	6.350	5/8	15.875	25/128	4.978	17.526	1.607	1481	618	38	45	4.90
FR1810ZZ	5/16	7.938	1/2	12.700	5/32	3.967	13.894	0.787	540	275	40	48	1.72
FR6ZZ	3/8	9.525	7/8	22.225	9/32	7.142	24.613	1.575	3335	1422	32	38	12.39
FR8ZZ	1/2	12.700	1 1/8	28.575	5/16	7.938	31.120	1.575	5111	2413	27	32	25.60

* All Bearings are available with stainless steel 440C material, add prefix “SS”.

FBJ®

Deep Groove Ball Bearings

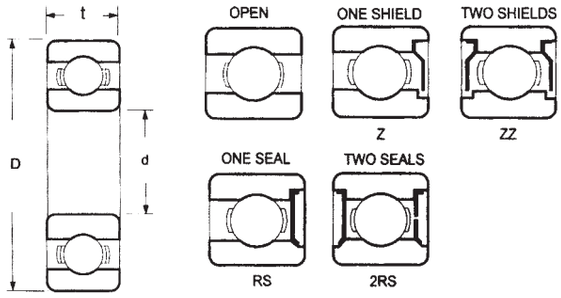

1600 Inch Series

Bearing Number	Dimensions (inch)						Basic Load Ratings (lbs)		Weight kg
	Bore		OD		Width				
	Frac	Inch	Frac	Inch	Frac	Inch	*Cr*	*Cor*	
1601	3/16	0.1875	11/16	0.6875	1/4	0.2500	294	146	0.004
1602	1/4	0.2500	11/16	0.6875	1/4	0.2500	294	146	0.006
1603	5/16	0.3125	7/8	0.8750	9/32	0.2812	464	228	0.010
1604	3/8	0.3750	7/8	0.8750	9/32	0.2812	464	228	0.009
1605	5/16	0.3125	29/32	0.9062	5/16	0.3125	464	228	0.017
1606	3/8	0.3750	29/32	0.9062	5/16	0.3125	464	228	0.022
1607	7/16	0.4375	29/32	0.9062	5/16	0.3125	400	229	0.022
1614	3/8	0.3750	1-1/8	1.1250	3/8	0.3750	400	229	0.035
1615	7/16	0.4375	1/1/8	1.1250	3/8	0.3750	400	229	0.032
1616	1/2	0.5000	1-1/8	1.1250	3/8	0.3750	400	229	0.030
1620	7/16	0.4375	1-3/8	1.3750	7/16	0.4375	600	354	0.450
1621	1/2	0.5000	1-3/8	1.3750	7/16	0.4375	600	354	0.048
1622	9/16	0.5625	1-3/8	1.3750	7/16	0.4375	600	354	0.046
1623	5/8	0.6250	1-3/8	1.3750	7/16	0.4375	600	354	0.040
1628	5/8	0.6250	1-5/8	1.6250	1/2	0.5000	738	454	0.072
1630	3/4	0.7500	1-5/8	1.6250	1/2	0.5000	738	454	0.065
1633	5/8	0.6250	1-3/4	1.7500	1/2	0.5000	738	454	0.092
1635	3/4	0.7500	1-3/4	1.7500	1/2	0.5000	738	454	0.085
1638	3/4	0.7500	2	2.0000	9/16	0.5625	1100	709	0.120
1640	7/8	0.8750	2	2.0000	9/16	0.5625	1100	709	0.112
1641	1	1.0000	2	2.0000	9/16	0.5625	1100	709	0.100
1652	1-1/8	1.1250	2-1/2	2.5000	5/8	0.6250	1306	857	0.210
1654	1-1/4	1.1250	2-1/2	2.5000	5/8	0.6250	1306	857	0.190

W200 Tri-Ply* Series

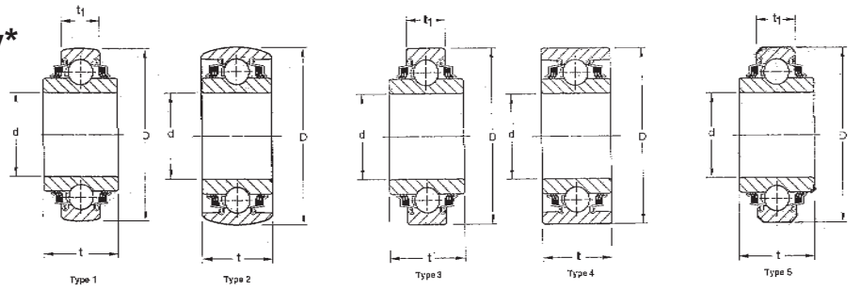

Deep Groove Ball Bearings

Bearing Number	Type	Bore Type	O.D Type	Dimensions (mm)								Basic Load Ratings (kN)		Weight (g)
				Bore	d	OD	D	Width (Inner Ring) t		Width (Outer Ring) t_1		C_r	C_{or}	
				inch	mm	inch	mm	inch	mm	inch	mm			
W208PPB12	1	Square	Spherical	1.1811	30.000	3.3760	85.75	1.438	36.53	1.189	87.31	20.2	36.8	0.92
W208PPB2	1	Cylindrical	Spherical	1.5005	38.113	3.1496	80.00	1.688	42.96	0.709	18.00	19.9	36.8	0.72
W208PPB5	1	Square	Spherical	$1^1/_8$	28.600	3.1496	80.00	1.438	36.53	0.709	18.00	19.9	36.8	0.67
W208PPB6	1	Square	Spherical	1	25.400	3.1496	80.00	1.438	36.53	0.709	18.00	19.9	36.8	0.72
W209PPB2	2	Cylindrical	Spherical	1.7717	45.000	3.3460	85.00	1.188	30.18	1.188	30.18	20.2	36.8	0.65
W210PPB2	2	Cylindrical	Spherical	$1^{15}/_{16}$	49.230	3.5430	90.00	1.188	30.18	1.188	30.18	23.0	39.9	0.71
W211PP2	4	Cylindrical	Cylindrical	2.188	55.580	3.9370	100.00	1.312	33.34	1.312	33.34	29.0	48.8	1.06
W211PP3	4	Square	Cylindrical	$1^1/_2$	38.100	3.9370	100.00	1.312	33.34	1.312	33.34	29.0	48.8	1.27
W211PP5	3	Square	Cylindrical	$1^1/_2$	38.100	4.0000	101.60	1.750	44.45	1.438	36.52	29.0	48.8	1.58
W211PPB2	2	Cylindrical	Spherical	2.188	55.580	3.9370	100.00	1.312	33.24	1.312	33.34	29.0	48.8	0.97
W211PPB3	2	Square	Spherical	$1^1/_2$	38.100	3.9370	100.00	1.312	33.34	1.312	33.34	29.0	48.8	1.21
W211PPB4	5	Cylindrical	Spherical	$2^3/_{16}$	55.563	3.9370	100.00	2.1874	55.56	1.312	33.34	29.0	48.8	1.11
W211PPB6	1	Square	Spherical	$1^{17}/_{32}$	38.890	4.0770	103.56	1.752	44.50	1.437	36.50	29.0	48.8	1.35

* Add Prefix 'G' for re-lubricatable type

FBJ®

Self-Aligning Ball Bearings

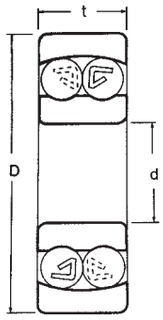

1200 & 2200 Series

Bearing Number	Dimensions (mm)			Basic Load Ratings (kN)		Limiting Speeds (rev/min)		Weight kg
	Bore d	OD D	Width t	*Cr*	*Cor*	Grease	Oil	
1200	10	30	9	5.50	1.20	23000	28000	0.034
1201	12	32	10	5.60	1.25	21000	26000	0.040
1202	15	35	11	7.45	1.75	18000	22000	0.049
1203	17	40	12	7.90	2.00	16000	20000	0.073
1204	20	47	14	9.90	2.60	14000	17000	0.120
1205	25	52	15	12.10	3.30	12000	14000	0.141
1206	30	62	16	15.60	4.65	9900	12000	0.220
1207	35	72	17	15.80	5.10	8500	10000	0.323
1208	40	80	18	19.20	6.50	7500	9200	0.417
1209	45	85	19	21.80	7.35	7000	8500	0.456
1210	50	90	20	22.70	8.10	6500	7900	0.525
1211	55	100	21	26.80	10.00	5800	7100	0.705
1212	60	110	22	30.20	11.50	5200	6400	0.900
1213	65	120	23	31.00	12.50	4800	5800	1.150
1214	70	125	24	34.60	13.80	4600	5700	1.260
1215	75	130	25	38.80	15.70	4300	5300	1.360
1216	80	140	26	39.8	17.0	4000	4900	1.670
1217	85	150	28	49.2	20.8	3800	4600	2.070
1218	90	160	30	56.8	23.4	3500	4300	2.520
1219	95	170	32	57.0	24.3	3300	4000	3.100
1220	100	180	34	69.0	29.7	3100	3800	3.700
1221	105	190	36	77.0	34.0	2900	3600	4.370
1222	110	200	38	80.2	35.2	2800	3400	5.150

2201	12	32	14	7.65	1.75	2100	2600	0.053
2202	15	35	14	7.70	1.85	1800	22000	0.060
2203	17	40	16	9.80	2.40	1600	20000	0.088
2204	20	47	18	12.60	3.30	1400	17000	0.140
2205	25	52	18	12.60	3.50	1200	15000	0.163
2206	30	62	20	15.60	4.65	1000	12000	0.260
2207	35	72	23	21.60	6.60	8500	10000	0.403
2208	40	80	23	22.40	7.40	7600	9300	0.505
2209	45	85	23	23.30	8.15	7000	8500	0.545
2210	50	90	23	23.30	8.50	6500	7900	0.590
2211	55	100	25	26.80	10.00	5800	7100	0.810
2212	60	110	28	34.10	12.60	5300	6500	1.090
2213	65	120	31	43.5	16.4	4900	5900	1.46
2214	70	125	31	43.9	17.1	4600	5600	1.52
2215	75	130	31	44.2	17.8	4300	5300	1.62
2216	80	140	33	49.0	19.9	4100	5000	2.01
2217	85	150	36	58.3	23.6	3800	4600	2.52
2218	90	160	40	67.7	27.2	3500	4300	3.40
2219	95	170	43	82.7	34.3	3300	4000	4.10
2220	100	180	46	80.9	34.0	3100	3800	4.98
2221	105	190	50	94.9	40.1	3000	3600	6.07
2222	110	200	53	120	48.9	2800	3400	7.10

*For Tapered Bore bearings add Suffix 'K'
For Brass cage add Suffix 'M'.

7200 Series

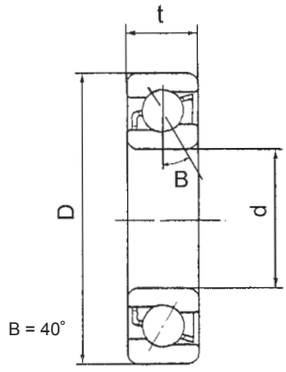

Angular Contact Ball Bearings

Bearing Number	Dimensions (mm)			Basic Load Ratings (N)		Limiting Speeds (rev/min)		Weight kg
	Bore d	OD D	Width t	*Cr*	*Cor*	Grease	Oil	
7200 B	10	30	9	7020	3350	19000	28000	0.030
7201 B	12	32	10	7610	3800	18000	26000	0.036
7202 B	15	35	11	8840	4800	17000	24000	0.045
7203 B	17	40	12	11100	6100	15000	20000	0.065
7204 B	20	47	14	14000	8300	12000	17000	0.110
7205 B	25	52	15	15600	10200	10000	15000	0.130
7206 B	30	62	16	23800	15600	8500	12000	0.200
7207 B	35	72	17	30700	20800	8000	11000	0.280
7208 B	40	80	18	36400	26000	7000	9500	0.370
7209 B	45	85	19	37700	28000	6700	9000	0.420
7210 B	50	90	20	39000	30500	6000	8000	0.470
7211 B	55	100	21	48800	38000	5600	7500	0.620
7212 B	60	110	22	57200	45500	5000	6700	0.800
7213 B	65	120	23	66300	54000	4500	6000	1.000
7214 B	70	125	24	71500	60000	4300	5600	1.100
7215 B	75	130	25	72800	64000	4300	5600	1.200
7216 B	80	140	26	83200	73500	3800	5000	1.450
7217 B	85	150	28	95600	83000	36000	4800	1.850
7218 B	90	160	30	10800	96500	3400	4500	2.300
7219 B	95	170	32	124000	108000	3200	4300	2.700
7220 B	100	180	34	135000	122000	3000	4000	3.300
7221 B	105	190	36	148000	137000	2800	3800	3.950
7222 B	120	200	38	163000	153000	2600	3600	4.600
7224 B	100	215	40	165000	163000	2200	3200	6.100

*For Brass cage add, Suffix ‘M’.

FBJ®

Angular Contact Ball Bearings

7300 Series

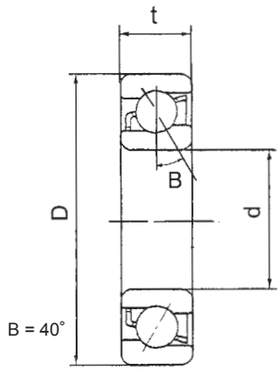

Bearing Number	Dimensions (mm)			Basic Load Ratings (N)		Limiting Speeds (rev/min)		Weight kg
	Bore d	OD D	Width t	*Cr*	*Cor*	Grease	Oil	
7302 B	15	42	13	13000	6700	15000	20000	0.08
7303 B	17	47	14	15900	8300	13000	18000	0.11
7304 B	20	52	15	19000	10400	11000	16000	0.14
7305 B	25	62	17	26000	15600	9000	13000	0.23
7306 B	30	72	19	34500	21200	8000	11000	0.34
7307 B	35	80	21	39000	24500	7500	10000	0.45
7308 B	40	90	23	49400	33500	6700	9000	0.63
7309 B	45	100	25	60500	41500	6000	8000	0.85
7310 B	50	110	27	74100	51000	5300	7000	1.10
7311 B	55	120	29	85200	60000	4800	6300	1.40
7312 B	60	130	31	95600	69500	4500	6000	1.75
7313 B	65	140	33	108000	80000	4300	5600	2.15
7314 B	70	150	35	119000	90000	3800	5000	2.65
7315 B	75	160	37	133000	106000	3600	4800	3.20
7316 B	80	170	39	143000	118000	3400	4500	3.80
7317 B	85	180	41	153000	132000	3200	4300	4.45
7318 B	90	190	43	165000	146000	3000	4000	5.20
7319 B	95	200	45	178000	163000	2800	3800	6.05
7320 B	100	215	47	203000	190000	2600	3600	7.50

* For Brass cage, add Suffix ‘M’.

Double Row 5200 Series

Angular Contact Ball Bearings

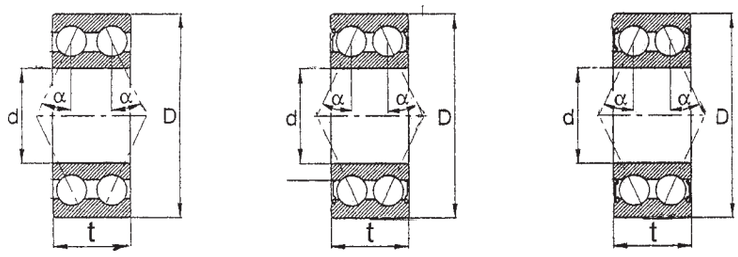

Bearing Number	Dimensions (mm)			Basic Load Ratings (N)		Limiting Speeds (rev/min)		Weight kg
	Bore d	OD D	Width t	*Cr*	*Cor*	Grease	Oil	
5200	10	30	14.3	6.95	3.80	14000	19000	0.094
5201	12	32	15.9	9.15	5.05	13000	17000	0.057
5202	15	35	15.9	10	6.05	11000	15000	0.064
5203	17	40	17.5	13.2	8.15	11000	14000	0.091
5204	20	47	20.6	19.7	12.60	8800	12000	0.120
5205	25	52	20.6	21.4	14.80	7700	10000	0.190
5206	30	62	23.8	29.7	21.30	6400	8600	0.290
5207	35	72	27	39.2	29.00	5500	7300	0.430
5208	40	80	30.2	44.4	33.60	5000	6700	0.570
5209	45	85	30.2	49.9	38.40	4600	6100	0.620
5210	50	90	30.2	53.3	43.60	4300	5600	0.670
5211	55	100	33.3	65.9	55.20	3800	5100	0.960
5212	60	110	36.5	74.4	60.80	3500	4700	1.360
5213	65	120	38.1	86.9	75.30	3200	4300	1.660
5214	70	125	39.7	94.5	82.60	3100	4100	1.810
5215	75	130	41.3	92.4	120.00	2900	3900	2.100

5300 Series

Angular Contact Ball Bearings

Bearing Number	Dimensions (mm)			Basic Load Ratings (N)		Limiting Speeds (rev/min)		Weight kg
	Bore d	OD D	Width t	*Cr*	*Cor*	Grease	Oil	
5302	15	42	19	17.2	10.1	9900	13000	0.132
5303	17	47	22.2	20.4	12.1	9000	12000	0.181
5304	20	52	22.2	20.6	12.7	8000	11000	0.217
5305	25	62	25.4	30.5	20.5	6700	8900	0.362
5306	30	72	30.2	39.5	27.5	5700	7600	0.553
5307	35	80	34.9	49.5	35	5000	6600	0.766
5308	40	90	36.5	60.5	44	4400	5900	1.01
5309	45	100	39.7	72.5	54	4000	5300	1.34
5310	50	110	44.4	85.5	64.5	3600	4800	1.81
5311	55	120	49.2	106	82	3300	4400	2.32
5312	60	130	54	122	95.5	3000	4000	3.05
5313	65	140	58.7	138	109	2800	3700	3.96
5314	70	150	63.5	155	125	2600	3500	4.74
5315	75	160	68.3	168	141	2400	3200	5.65

FBJ®

Four Point Ball Bearings

QJ 200 Series

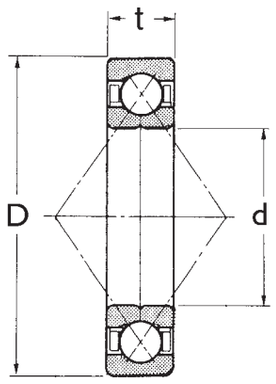

Bearing Number	Dimensions (mm)			Basic Load Ratings (N)		Limiting Speeds (rev/min)		Weight kg
	Bore d	OD D	Width t	*Cr*	*Cor*	Grease	Oil	
QJ208	40	80	18	350	650	6900	9200	0.450
QJ209	45	85	19	400	740	6200	8200	0.520
QJ210	50	90	20	410	800	5600	7500	0.603
QJ211	55	100	21	510	1000	5100	6800	0.780
QJ212	60	110	22	620	1240	4700	6300	0.987
QJ213	65	120	23	680	1380	4400	5800	1.24
QJ214	70	125	24	730	1520	4000	5400	1.36
QJ215	75	130	25	770	1630	3800	5000	1.53
QJ216	80	140	26	900	1940	3500	4700	1.83
QJ217	85	150	28	1000	2240	3300	4400	2.30
QJ218	90	160	30	1180	2630	3100	4200	2.76
QJ219	95	170	32	1350	3120	3000	3900	3.35
QJ220	100	180	34	1450	3220	2800	3700	4.02
QJ221	105	190	36	1570	3620	2700	3600	4.75
QJ222	110	200	38	1700	4030	2500	3400	5.62
QJ224	120	215	40	1930	4840	2300	3100	6.75

Four Point Ball Bearings

QJ 300 Series

Bearing Number	Dimensions (mm)			Basic Load Ratings (N)		Limiting Speeds (rev/min)		Weight kg
	Bore d	OD D	Width t	*Cr*	*Cor*	Grease	Oil	
QJ306	30	72	19	320	540	8000	11000	0.420
QJ307	35	80	21	400	690	7000	9300	0.570
QJ308	40	90	23	500	860	6200	8200	0.078
QJ309	45	100	25	630	1150	5500	7400	1.05
QJ310	50	110	27	740	1380	5000	6700	1.38
QJ311	55	120	29	850	1610	4600	6100	1.76
QJ312	60	130	31	970	1880	4200	5700	2.18
QJ313	65	140	33	1100	2150	3900	5200	2.70
QJ314	70	150	35	1230	2450	3600	4800	3.27
QJ315	75	160	37	1350	2780	3400	4500	3.90
QJ316	80	170	39	1460	3100	3200	4200	4.64
QJ317	85	180	41	1600	3460	3000	4000	5.43
QJ318	90	190	43	1680	3820	2800	3800	6.31
QJ319	95	200	45	1800	4230	2700	3500	7.41
QJ320	100	215	47	2180	5500	2500	3400	9.14
QJ321	105	225	49	2180	5500	2400	3200	10.4
QJ322	110	240	50	1427	6470	2300	3100	12.0
QJ324	120	260	55	2590	7140	2100	2800	15.9

2900 Series

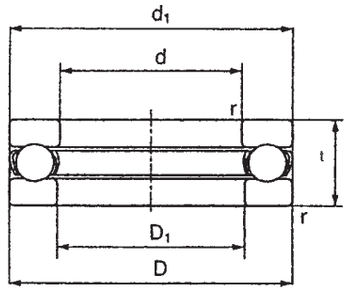

Thrust Ball Bearings

Bearing Number	Dimensions (mm)						Basic Load Ratings (N)		Limiting Speeds (rev/min)		Weight kg
	d	D	t	D_1 (min)	d_1 (max)	r (min)	*Cr*	*Cor*	Grease	Oil	
2900	10	26	12	10.2	26	0.6	12700	17100	5600	8400	0.035
2901	12	28	12	12.2	28	0.6	13200	19000	5400	8100	0.037
2902	15	31	12	15.2	31	0.6	14300	22800	5100	7700	0.041
2903	18	35	12	18.2	35	0.6	14400	24700	4800	7300	0.045
2904	20	37	12	20.2	37	0.6	14800	26600	4700	7100	0.055
2904-$^1/_2$	22	42	14	22.2	42	0.6	18900	34500	4100	6100	0.085
2905	25	45	14	25.2	45	0.6	19300	37000	3900	5900	0.093
2906	30	50	14	30.2	0.6	0.6	20200	42000	3700	5600	0.107
2907	35	55	16	35.2	55	0.6	29900	62000	3300	5000	0.137
2908	40	60	16	40.2	60	0.6	31000	70000	3200	4800	0.150
2909	45	68	16	45.2	68	0.6	32500	77500	3000	4500	0.199
2910	50	74	18	50.2	74	0.6	38500	94000	2700	4100	0.255
2911	55	78	18	55.2	78	0.6	40000	103000	2600	4000	0.270
2912	60	82	18	60.2	82	0.6	40500	108000	2600	3900	0.275
2913	65	90	20	65.2	90	0.6	47500	129000	2300	3500	0.374
2914	70	95	20	70.2	95	0.6	49000	140000	2200	3400	0.400
2915	75	100	20	75.2	100	0.6	51000	151000	2200	3300	0.425
2916	80	110	22	80.2	110	0.6	57000	171000	2000	3000	0.600
2917	85	115	22	85.2	115	0.6	59000	184000	1900	2900	0.640
2918	90	120	22	90.2	120	0.6	59500	190000	1900	2900	0.670
2919	95	130	25	95.2	130	0.6	75500	236000	1700	2600	0.795
2920	100	135	25	100.2	135	0.6	78000	253000	1700	2500	0.930
2921	105	140	25	105.2	140	0.6	78500	262000	1600	2500	1.02
2922	110	145	25	110.2	145	0.6	78000	262000	1600	2400	1.15
2923	115	150	25	115.2	150	0.6	73500	245000	1600	2400	1.25
2924	120	160	27	120.2	160	0.6	94000	314000	1500	2200	1.35
2925	125	160	27	125.3	165	0.6	85500	298000	1400	2200	1.48
2928	140	185	31	140.3	185	0.6	106000	375000	1300	1900	2.33

FBJ®

Thrust Ball Bearings

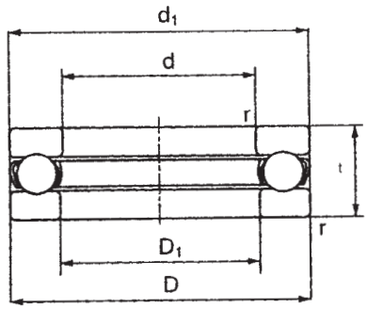

3900 Series

Ball / Roller Bearing

Bearing Number	Dimensions (mm)						Basic Load Ratings (N)		Limiting Speeds (rev/min)		Weight kg
	d	D	t	D_1 (min)	d_1 (max)	r (min)	*Cr*	*Cor*	Grease	Oil	
3905	25	52	16	25.2	52	1	27100	50500	3400	5200	0.147
3906	30	60	19	30.2	60	1	38000	72500	2900	4400	0.237
3907	35	68	22	35.2	68	1	50500	99000	2500	3800	0.346
3908	40	76	25	40.2	76	1	61000	119000	2200	3400	0.486
3909	45	85	28	45.2	85	1	79500	163000	2000	3000	0.684
3910	50	92	31	50.2	92	1	97000	202000	1800	2800	0.889
3911	55	100	33	55.2	100	1	110000	240000	1700	2600	1.114
3912	60	106	35	60.2	106	1.5	119000	263000	1600	2400	1.293
3913	65	112	36	65.2	112	1.5	128000	287000	1500	2300	1.443
3914	70	120	38	70.2	120	1.5	143000	335000	1400	2200	1.767
3915	75	128	41	75.2	128	1.5	159000	365000	1300	2000	2.132
3916	80	136	44	80.2	136	1.5	183000	425000	1200	1900	2.606
3917	85	145	47	85.2	145	1.5	207000	490000	1100	1700	3.157
3918	90	155	50	90.2	155	1.5	232000	555000	1100	1600	3.907
3919	95	165	54	95.2	165	1.5	253000	630000	1000	1500	4.810
3920	110	172	57	100.2	172	1.5	250000	630000	980	1400	5.454
3921	115	180	60	105.2	180	2.5	257000	670000	930	1400	6.354
3922	110	190	63	110.2	190	2.5	293000	785000	880	1300	7.333
3923	115	200	66	115.2	200	2.5	315000	870000	840	1200	8.526
3924	120	210	69	120.5	210	2.5	325000	930000	800	1200	10.195

51100 Series

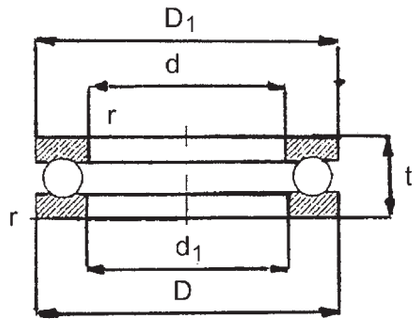

Thrust Ball Bearings

Bearing Number	Dimensions (mm)						Basic Load Ratings (N)		Limiting Speeds(rev/min)		Weight kg
	d	D	t	d_1	D_1	r	*Cr*	*Cor*	Grease	Oil	
51100	10	24	9	11	24	0.3	9950	14000	7000	9500	0.02
51101	12	26	9	13	26	0.3	10400	15300	6700	9000	0.022
51102	15	28	9	16	28	0.3	9360	14000	6300	8500	0.023
51103	17	30	9	18	30	0.3	9750	15300	6300	8500	0.025
51104	20	35	10	20	35	0.3	12700	20800	5600	7500	0.038
51105	25	42	11	26	42	0.6	15900	29000	4800	6300	0.056
51106	30	47	11	32	47	0.6	16800	33500	4500	6000	0.063
51107	35	52	12	37	52	0.6	17400	37500	4300	5600	0.08
51108	40	60	13	42	60	0.6	23400	50000	3800	5000	0.12
51109	45	65	14	47	65	0.6	24200	57000	3400	4500	0.14
51110	50	70	14	52	70	0.6	25500	63000	3200	4300	0.16
51111	55	78	16	57	78	0.6	30700	78000	2800	3800	0.23
51112	60	85	17	62	85	1.0	35800	90000	2600	3600	0.2
51113	65	90	18	67	90	1.0	37100	98000	2400	3400	0.33
51114	70	95	18	72	95	1.0	37700	104000	2400	3400	0.35
51115	75	100	19	77	100	1.0	44200	137000	2200	3200	0.4
51116	80	105	19	82	105	1.0	44900	140000	2000	3000	0.42
51117	85	110	19	87	110	1.0	46200	150000	2000	3000	0.44
51118	90	120	22	92	120	1.0	59200	190000	1800	2600	0.67
51120	100	135	25	102	135	1.0	85200	270000	1700	2400	0.97
51122	110	145	25	112	145	1.0	87100	290000	1600	2200	1.05
51124	120	155	25	122	155	1.0	88400	310000	1600	2200	1.15
51126	130	170	30	132	170	1.0	111000	390000	1400	1900	1.85
51128	140	180	31	142	178	1.0	111000	400000	1300	1800	2.05
51130	150	190	31	152	188	1.0	111000	400000	1200	1700	2.2

FBJ®

Thrust Ball Bearings

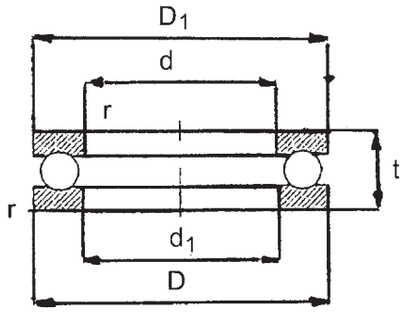

51200 Series

Ball / Roller Bearing

Bearing Number	Dimensions (mm)						Basic Load Ratings (N)		Limiting Speeds(rev/min)		Weight kg
	d	D	t	d_1	D_1	r	*Cr*	*Cor*	Grease	Oil	
51200	10	26	11	12	26	0.6	12700	17000	6000	8000	0.031
51201	12	28	11	14	28	0.6	12300	19000	6000	8000	0.034
51202	15	32	12	17	32	0.6	16500	25000	5300	7000	0.046
51203	17	35	12	19	35	0.6	17200	27500	5000	6700	0.053
51204	20	40	14	22	40	0.6	22500	37500	4500	6000	0.083
51205	25	47	15	27	47	0.6	27600	50000	4000	5300	0.110
51206	30	52	16	32	52	0.6	25500	47500	3600	4800	0.130
51207	35	62	18	37	62	1.0	35100	67000	3000	4000	0.220
51208	40	68	19	42	68	1.0	46800	98000	2800	3800	0.280
51209	45	73	20	47	73	1.0	3900	80000	2600	3600	0.300
51210	50	78	22	52	78	1.0	49400	106000	2400	3400	0.370
51211	55	90	25	57	90	1.0	61800	134000	1900	2800	0.590
51212	60	95	26	62	95	1.0	62400	140000	1900	2800	0.650
51213	65	100	27	67	100	1.0	63700	150000	1800	2600	0.780
51214	70	105	27	72	105	1.0	65000	160000	1800	2600	0.790
51215	75	110	27	77	110	1.0	67600	170000	1700	2400	0.830
51216	80	115	28	82	115	1.0	76100	190000	1700	2400	0.910
51217	85	125	31	88	125	1.0	97500	250000	1600	2200	1.200
51218	90	135	35	93	135	1.1	119000	300000	1500	2000	1.700
51220	100	150	38	103	150	1.1	124000	320000	1300	1800	2.200
51222	110	150	38	113	160	1.1	130000	360000	1200	1700	2.400
51224	120	170	39	123	170	1.1	140000	400000	1100	1600	2.650
51226	130	190	45	133	187	1.5	186000	540000	950	1400	4.000
51228	140	200	46	143	197	1.5	190000	570000	950	1400	4.350
51230	150	215	50	153	212	1.5	238000	730000	900	1300	6.100

51300 Series

Thrust Ball Bearings

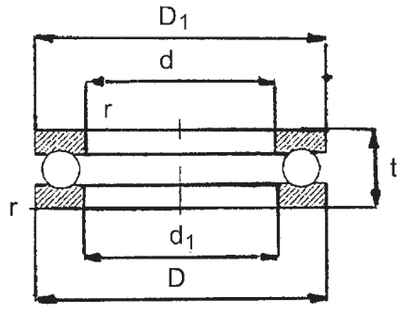

Bearing Number	Dimensions (mm)						Basic Load Ratings (N)		Limiting Speeds(rev/min)		Weight kg
	d	D	t	d_1	D_1	r	*Cr*	*Cor*	Grease	Oil	
51305	25	52	18	27	52	1.0	34500	55000	3400	4500	0.17
51306	30	60	21	32	60	1.0	37700	65500	2800	3800	0.26
51307	35	68	24	37	68	1.0	49400	88000	2400	3400	0.38
51308	40	78	26	42	78	1.0	61800	112000	2000	3000	0.53
51309	45	85	28	47	85	1.0	76100	140000	1900	2800	0.66
51310	50	95	31	52	95	1.1	88400	173000	18000	2600	0.94
51311	55	105	35	57	105	1.1	104000	208000	1600	2200	1.30
51312	60	110	35	62	110	1.1	101000	208000	1600	2200	1.35
51313	65	115	36	67	115	1.1	106000	220000	1500	2000	1.50
51314	70	125	40	72	125	1.1	135000	300000	1400	1900	2.00
51315	75	135	44	77	135	1.5	163000	360000	1200	1700	2.60
51316	80	140	44	82	140	1.5	159000	360000	1200	1700	2.70
51317	85	150	49	88	150	1.5	190000	425000	1100	1600	3.55
51318	90	155	50	93	155	1.5	195000	465000	1000	1500	3.80
51320	100	170	55	103	170	1.5	229000	560000	950	1400	4.95
51322	110	190	63	113	187	2.0	276000	720000	850	1200	7.85
51324	120	210	70	123	205	2.1	325000	915000	800	1100	11.00

51400 Series

Thrust Ball Bearings

51405	25	60	24	27	60	1.0	55300	90000	2600	3600	0.34
51406	30	70	28	32	70	1.0	72800	125000	2000	3000	0.52
51407	35	80	32	37	80	1.0	87100	156000	1800	2600	0.76
51408	40	90	36	42	90	1.1	112000	204000	1700	2400	1.10
51409	45	100	39	47	100	1.1	130000	240000	1600	2200	1.40
51410	50	110	43	52	110	1.5	159000	310000	1500	2000	2.00
51411	55	120	48	57	120	1.5	178000	360000	1300	1800	2.55
51412	60	130	51	62	130	1.5	199000	400000	1100	1600	3.10
51413	65	140	56	68	140	2.0	215000	448000	1000	1500	4.67
51414	70	150	60	73	150	2.0	235000	499000	980	1400	5.72
51415	75	160	65	78	160	2.0	251000	560000	900	1300	6.75

FBJ®

Thrust Ball Bearings

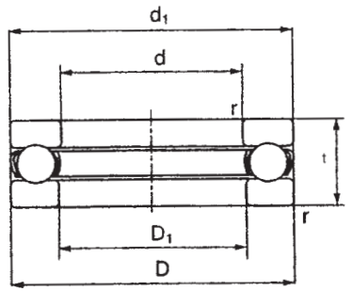

Inch Series

Bearing Number	Dimensions (mm)						Basic Load Ratings (N)		Limiting Speeds (rev/min)		Weight kg
	d	D	t	D_1 (min)	d_1 (max)	r (min)	*Cr*	*Cor*	Grease	Oil	
0-3	9.525	25.400	13.494	9.925	24.606	0.8	11800	15200	5400	8100	0.036
0-4	12.700	32.544	15.875	13.097	31.750	0.8	18600	25100	4300	6500	0.077
0-5	15.875	35.719	15.875	16.272	34.925	0.8	19400	28300	4100	6200	0.086
0-6	19.050	38.894	15.875	19.447	38.100	0.8	21400	64500	4000	6000	0.095
0-7	22.225	42.069	15.875	22.622	41.275	0.8	21900	37500	3800	5800	0.100
0-8	25.400	45.244	15.875	25.797	44.450	1.6	22500	41000	3700	5500	0.110
0-9	28.575	48.419	15.875	28.972	47.625	1.6	24100	47000	3600	5400	0.128
0-10	31.750	53.181	18.256	32.147	52.388	1.6	27900	54500	3200	4800	0.164
0-11	34.925	56.356	18.256	35.322	55562	1.6	28600	58000	3100	4600	0.186
0-12	38.100	59.531	18.256	38.497	58.738	1.6	30500	3000	4500	4500	0.200
0-13	41.275	62.706	18.256	41.672	61.912	1.6	26700	63000	2900	4400	0.210
0-14	44.450	68.262	19.050	44.847	67.469	1.6	321500	77500	2700	4100	0.260
0-15	47.625	71.438	19.050	48.021	70.644	1.6	37500	89000	2700	4000	0.285
0-16	50.800	75.406	19.050	51.594	74.613	2.4	38000	94000	2600	3900	0.300
0-17	53.975	81.756	22.225	54.769	10.962	2.4	49500	118000	2300	3500	0.405
0-18	57.150	84.931	22.225	57.944	84.138	2.4	50500	125000	2300	3400	0.405
0-19	60.325	91.281	25.400	61.119	90.488	2.4	58000	145000	2000	3100	0.590
0-20	63.500	94.456	25.400	64.294	93.662	2.4	59500	152000	2000	3000	0.610
0-21	66.675	97.631	25.400	67.469	96.838	2.4	60500	160000	1900	2900	0.660
0-22	69.850	102.394	25.400	70.644	101.600	2.4	71500	179000	70.644	101.600	0.700
0-23	73.025	105.569	25.400	73.819	104.775	2.4	75500	199000	1900	2800	0.730
0-24	76.200	111.125	28.575	77.788	109.38	3.2	77000	209000	1700	2600	0.900
0-26	82.550	122.238	31.750	84.138	120.50	3.2	97500	252000	1600	2400	1.30
0-28	88.900	128.588	31.750	90.488	127.00	3.2	99000	266000	1500	2300	1.32

Single Row NU, NJ, NUP, N, NF Series

Cylindrical Roller Bearings

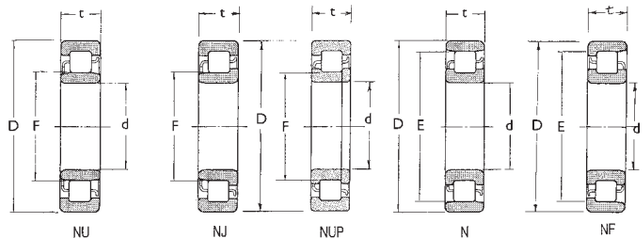

Bearing Number					Dimensions (mm)					Basic Load Ratings (N)		Limiting Speeds (rev/min)		Weight kg
					d	D	t	F	E	*Cr*	*Cor*	Grease	Oil	
NU 204	NJ	NUP	N	NF	20	47	14	27	40	1 5400	12700	15000	18000	0.110
NU 2204	NJ	NUP	–	–	20	47	18	27	–	20700	18400	13000	16000	0.144
NU 304	NJ	NUP	N	NF	20	52	15	28.5	44.5	21400	17300	12000	15000	0.150
NU 2304	NJ	NUP	–	–	20	52	21	28.5	–	21400	27200	11000	14000	0.217
NU 1005	–	–	–	–	25	47	12	30.5	–	14300	13100	15000	18000	0.094
NU 205	NJ	NUP	N	NF	25	52	15	32	45	17700	15700	13000	16000	0.137
NU 2205	NJ	NUP	–	–	25	52	18	32	–	23700	22800	12000	14000	0.167
NU 305	NJ	NUP	N	NF	25	62	17	35	53	29300	25200	10000	13000	0.240
NU 2305	NJ	NUP	–	–	25	62	24	35	–	42500	41000	9000	11000	0.345
NU 1006	–	–	N	–	30	55	13	36.5	48.5	19700	19600	12000	15000	0.136
NU 206	NJ	NUP	–	–	30	62	16	38.5	–	23500	21500	11000	13000	0.211
NU 2206	NJ	NUP	–	–	30	62	20	38.5	–	33000	33000	10000	12000	0.266
NU 306	NJ	NUP	N	NF	30	72	19	42	62	38500	35000	8500	11000	0.361
NU 2306	NJ	NUP	–	–	30	72	27	42	–	51500	51000	7500	9500	0.514
NU 1007	–	–	N	–	35	62	14	42	55	22600	23200	11000	13000	0.180
NU 207	NJ	NUP	–	–	35	72	17	43.8	–	33500	31500	9500	11000	0.300
NU 2207	NJ	NUP	–	–	35	72	23	43.8	–	49000	51000	8500	10000	0.414
NU 307	NJ	NUP	N	NF	35	80	21	46.2	68.2	49500	47000	8000	9500	0.481
NU 2307	NJ	NUP	–	–	35	80	31	46.2	–	60500	60000	7100	8500	0.702
NU 1008	–	–	N	–	40	68	15	47	61	27300	29000	10000	12000	0.223
NU 208	NJ	NUP	N	NF	40	80	18	50	70	43500	43000	8500	10000	0.382
NU 2208	NJ	NUP	–	–	40	80	23	50	–	58000	62000	7500	9000	0.496
NU 308	NJ	NUP	N	NF	40	90	23	53.5	77.5	58500	57000	6700	8500	0.665
NU 2308	NJ	NUP	–	–	40	90	33	53.5	–	82500	88000	6000	7500	0.962
NU 1009	–	–	N	–	45	75	16	52.5	67.5	32500	35500	9000	11000	0.279
NU 209	NJ	NUP	N	NF	45	85	19	55	75	46000	47000	7500	9000	0.438
NU 2209	NJ	NUP	–	–	45	85	23	55	–	61500	68000	7100	8500	0.541
NU 309	NJ	NUP	–	–	45	100	25	58.5	–	74000	71000	6300	7500	0.876

*The bearing is available in maximum capacity design, add Suffix ‘E’ or machine brass cage, add suffix ‘M’

FBJ®

Cylindrical Roller Bearings

Single Row NU, NJ, NUP, N, NF Series

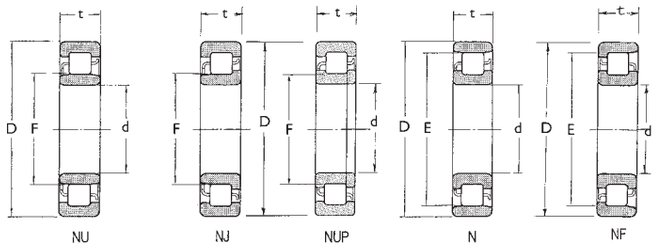

Bearing Number					Dimensions (mm)					Basic Load Ratings (N)		Limiting Speeds (rev/min)		Weight kg
					d	D	t	F	E	*Cr*	*Cor*	Grease	Oil	
NU 2309	NJ	NUP	–	–	45	100	36	58.5	–	99000	104000	5600	6700	1.260
NU 1010	–	–	N	–	50	80	16	57.5	72.5	32000	36000	8000	10000	0.301
NU 210	NJ	NUP	N	NF	50	90	20	60.4	80.4	48000	51000	7100	8500	0.493
NU 2210	NJ	NUP	–	–	50	90	23	60.4	–	64000	73500	6300	8000	0.580
NU 310	NJ	NUP	N	NF	50	110	27	65	95	87000	86000	5600	6700	1.140
NU 2310	NJ	NUP	–	–	50	110	40	65	–	121000	131000	5000	6300	1.690
NU 1011	–	–	N	–	55	90	18	64.5	80.5	37500	44000	7500	9000	0.445
NU 211	NJ	NUP	N	NF	55	100	21	66.5	88.5	58000	62500	6300	7500	0.648
NU 2211	NJ	NUP	–	–	55	100	25	66.5	–	75500	87000	6000	7100	0.786
NU 311	NJ	NUP	N	NF	55	120	29	70.5	104.5	111000	111000	5000	6300	1.450
NU 2311	NJ	NUP	–	–	55	120	43	70.5	–	148000	162000	4500	5600	2.160
NU 1012	–	–	N	–	60	95	18	69.5	85.5	40000	48500	6700	8500	0.474
NU 212	NJ	NUP	N	NF	60	110	22	73.5	97.5	68500	75000	6000	7100	0.840
NU 2212	NJ	NUP	–	–	60	110	28	73.5	–	96000	116000	5300	6300	1.090
NU 312	NJ	NUP	N	NF	60	130	31	77	113	124000	126000	4800	5600	1.820
NU 2312	NJ	NUP	–	–	60	130	46	77	–	169000	188000	4300	5300	2.690
NU 1013	–	–	N	–	65	100	18	74.5	90.5	41000	51000	6300	8000	0.504
NU 213	NJ	NUP	N	NF	65	120	23	79.6	105.6	84000	94500	5300	6300	1.070
NU 2213	NJ	NUP	–	–	65	120	31	79.6	–	120000	149000	4800	6000	1.470
NU 313	NJ	NUP	N	NF	65	140	33	83.5	121.5	135000	139000	4300	5300	2.230
NU 2313	NJ	NUP	–	–	65	140	48	83.5	–	188000	212000	3800	4800	3.250
NU 1014	–	–	N	–	70	110	20	80	100	58500	70500	6000	7100	0.693
NU 214	NJ	NUP	N	NF	70	125	24	84.5	110.5	83500	95000	5000	6300	1.160
NU 2214	NJ	NUP	–	–	70	125	31	84.5	–	119000	151000	4500	5600	1.540
NU 314	NJ	NUP	–	–	70	150	35	90	–	158000	168000	4000	5000	2.750
NU 2314	NJ	NUP	–	–	70	150	51	90	–	223000	262000	3600	4500	4.040

*The bearing is available in maximum capacity design, add Suffix ‘E’ or machine brass cage, add suffix ‘M’

Single Row NU, NJ, NUP, N, NF Series

Cylindrical Roller Bearings

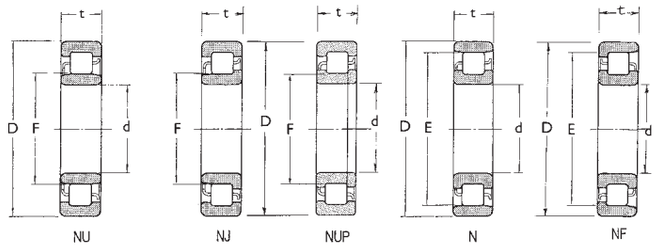

Bearing Number					Dimensions (mm)					Basic Load Ratings (N)		Limiting Speeds (rev/min)		Weight kg
					d	D	t	F	E	*Cr*	*Cor*	Grease	Oil	
NU 1015	–	–	N	–	75	115	20	85	105	60000	74500	5600	6700	0.731
NU 215	NJ	NUP	N	NF	75	130	25	88.5	116.5	96500	111000	4800	6000	1.250
NU 2215	NJ	NUP	–	–	75	130	31	88.5	–	130000	162000	4300	5300	1.580
NU 315	NJ	NUP	N	NF	75	160	37	95.5	139.5	179000	189000	3800	4800	3.260
NU 2315	NJ	NUP	–	–	75	160	55	95.5	–	258000	300000	3400	4300	4.910
NU 1016	–	–	N	–	80	125	22	91.5	113.5	72500	90500	5300	6300	0.969
NU 216	NJ	NUP	N	NF	80	140	26	95.3	125.3	106000	122000	4500	5300	1.500
NU 2216	NJ	NUP	–	–	80	140	33	95.3	–	147000	186000	4000	5000	1.950
NU 316	NJ	NUP	N	NF	80	170	39	103	147	190000	207000	3600	4300	3.930
NU 2316	NJ	NUP	–	–	80	170	58	103	–	274000	330000	3200	4000	5.910
NU 1017	–	–	N	–	85	130	22	96.5	118.5	74500	95500	5000	6000	1.010
NU 217	NJ	NUP	N	NF	85	150	28	101.8	133.8	120000	140000	4300	5000	1.900
NU 2217	NJ	NUP	–	–	85	150	36	101.8	–	170000	218000	3800	4500	2.500
NU 317	NJ	NUP	N	NF	85	180	41	108	156	212000	228000	3400	4000	4.600
NU 2317	NJ	NUP	–	–	85	180	60	108	–	315000	380000	3000	3800	6.81
NU 1018	–	–	N	–	90	140	24	103	127	88000	114000	4500	5600	1.35
NU 218	NJ	NUP	N	NF	90	160	30	107	143	152000	178000	4000	4800	2.35
NU 2218	NJ	NUP	–	–	90	160	40	107	–	207000	265000	3600	4300	3.18
NU 318	NJ	NUP	N	NF	90	190	43	115	165	240000	265000	3200	3800	5.38
NU 2318	NJ	NUP	–	–	90	190	64	115	–	325000	395000	2800	3600	8.04
NU 1019	–	–	N	–	95	145	24	108	132	90500	120000	4300	5300	1.41
NU 219	NJ	NUP	–	–	95	170	32	113.5	–	158000	183000	3800	4500	2.80
NU 2219	NJ	NUP	–	–	95	170	43	113.5	–	230000	298000	3400	4000	3.89
NU 319	NJ	NUP	N	NF	95	200	45	121.5	173.5	259000	289000	3000	3600	6.23
NU 2319	NJ	NUP	–	–	95	200	67	121.5	–	370000	460000	2600	3400	9.38
NU 1020	–	–	N	–	100	150	24	113	137	93000	126000	4300	5300	1.47
NU 220	NJ	NUP	N	NF	100	180	34	120	160	183000	217000	3600	4300	3.42
NU 2220	NJ	NUP	–	–	100	180	46	120	–	246000	315000	3200	3800	4.68
NU 320	NJ	NUP	N	NF	100	215	47	129.5	185.5	299000	335000	2800	3400	7.69
NU 2320	NJ	NUP	–	–	100	215	73	129.5	–	410000	505000	2400	3200	11.90
NU 1021	-	-	N	–	105	160	26	119.5	145.5	109000	149000	4000	4800	1.83
NU 221	NJ	NUP	N	NF		190	36	126.8	168.8	201000	241000	3400	4000	4.07
NU 321	NJ	NUP	N	NF		225	49	135	195	320000	360000	2600	3200	8.68
NU 1022	-	-	N	-	110	170	28	125	155	131000	174000	3800	4500	2.27
NU 222	NJ	NUP	N	NF		200	38	132.5	178.5	229000	272000	3200	3800	4.73
NU 2222	NJ	NUP	-	-		200	53	132.5	-	320000	415000	2800	3400	6.68
NU 322	NJ	NUP	N	NF		240	50	143	207	360000	400000	2600	3000	10.3
NU 2322	NJ	NUP	-	-		240	80	143	-	570000	735000	2200	2800	18.6
NU 1024	-	-	N	-	120	180	28	135	165	139000	191000	3400	4300	2.43
NU 224	NJ	NUP	N	NF		215	40	143.5	191.5	248000	299000	3000	3400	5.65
NU 2224	NJ	NUP	-	-		215	58	143.5	-	350000	460000	2600	3200	8.34
NU 324	NJ	NUP	N	NF		260	55	154	226	450000	510000	2200	2800	13.2
NU 2324	NJ	NUP	-	-		260	86	154	-	710000	920000	2000	2600	23.4
NU 1026	-	-	N	-	130	200	33	148	182	172000	238000	3200	3800	3.66
NU 226	NJ	NUP	N	NF		230	40	156	204	258000	320000	2600	3200	6.5
NU 2226	NJ	NUP	-	-		230	64	156	-	380000	530000	2400	3000	10.5
NU 326	NJ	NUP	N	NF		280	58	167	243	500000	570000	2200	2600	16
NU 2326	NJ	NUP	-	-		280	93	167	-	840000	1130000	1900	2400	29.4

*The bearing is available in maximum capacity design, add Suffix 'E' or machine brass cage, add suffix 'M'

FBJ®

Cylindrical Roller Bearings

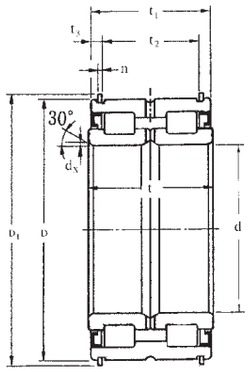

Double Row
SL04-5000 Series

Ball / Roller Bearing

Bearing Number	Dimensions (mm)									Basic Load Ratings (N)		Limiting Speeds (rev/min)	Weight kg
	d	D	t	d_x	D_1	t_1	t_2	t_3	n	C_r	C_{or}		
SL04-5008PP.2NR	40	68	38	0.8	71.8	37	27	4.5	2.5	7400	7400	2500	0.55
SL04-5009PP.2NR	45	75	40	0.8	78.8	39	29	4.5	2.5	8850	9250	2200	0.69
SL04-5010PP.2NR	50	80	40	0.8	83.8	39	29	4.5	2.5	9300	10000	2000	0.75
SL04-5011PP.2NR	55	90	46	1.0	94.8	45	34	5.5	3.0	11000	12200	1800	1.12
SL04-5012PP.2NR	60	95	46	1.0	99.8	45	34	5.5	3.0	11400	13100	1650	1.20
SL04-5013PP.2NR	65	100	46	1.0	104.8	45	34	5.5	3.0	11900	14100	1550	1.27
SL04-5014PP.2NR	70	110	54	1.0	114.5	53	40	5.5	4.0	15900	18000	1400	1.87
SL04-5015PP.2NR	75	115	54	1.0	119.5	53	40	5.5	4.0	18200	20600	1300	1.97
SL04-5016PP.2NR	80	125	60	1.0	129.5	59	46	5.5	4.0	19000	22200	1250	2.66
SL04-5017PP.2NR	85	130	60	1.0	134.5	59	46	5.5	4.0	19800	23800	1200	2.79
SL04-5018PP.2NR	90	140	67	1.5	146.0	66	51	6.0	4.0	28300	34500	1100	3.71
SL04-5019PP.2NR	95	145	67	1.5	151.0	66	51	6.0	4.0	28900	35500	1050	3.87
SL04-5020PP.2NR	100	150	67	1.5	156.0	66	51	6.0	4.0	30500	37000	1000	4.03
SL04-5022PP.2NR	110	170	80	1.8	176.0	79	62	7.0	4.0	35500	44000	900	6.55
SL04-5024PP.2NR	120	180	80	1.8	188.0	79	63	7.0	4.0	37000	47500	850	7.50
SL04-5026PP.2NR	130	200	95	1.8	208.0	94	75	8.5	4.0	50000	63500	750	10.50
SL04-5028PP.2NR	140	210	95	1.8	218.0	94	75	8.5	5.0	55500	71000	700	11.10
SL04-5030PP.2NR	150	225	100	2.0	233.0	99	77	9.0	5.0	64000	81500	650	13.30

30200 Series

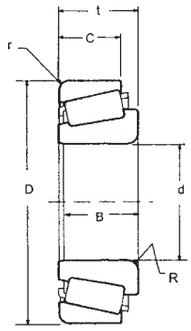

Tapered Roller Bearings

Bearing Number	Dimensions (mm)							Basic Load Ratings (N)		Weight kg
	d	D	t	B	C	r	R	*Cr*	*Cor*	
30203	17	40	13.25	12	11	1	1	19000	18600	0.08
30204	20	47	15.25	14	12	1	1	27500	28000	0.12
30205	25	52	16.25	15	13	1	1	30800	33500	0.15
30206	30	62	17.25	16	14	1	1	40200	44000	0.23
30207	35	72	18.25	17	15	1.5	1.5	51200	56000	0.32
30208	40	80	19.75	18	16	1.5	1.5	61600	68000	0.42
30209	45	85	20.75	19	16	1.5	1.5	66000	76500	0.48
30210	50	90	21.75	20	17	1.5	1.5	76500	91500	0.54
30211	55	100	22.75	21	18	1.5	2.0	89700	106000	0.70
30212	60	110	23.75	22	19	1.5	2.0	99000	114000	0.88
30213	65	120	24.75	23	20	1.5	2.0	114000	134000	1.15
30214	70	125	26.25	24	21	1.5	2.0	125000	156000	1.25
30215	75	130	27.25	25	22	1.5	2.0	140000	176000	1.40
30216	80	140	28.25	26	22	2.0	2.5	157000	183000	1.60
30217	85	150	30.50	28	24	2.5	2.0	184000	233000	2.12
30218	90	160	32.50	30	26	2.5	2.0	201000	256000	2.60
30219	95	170	34.50	32	27	3.0	2.5	223000	286000	3.13
30220	100	180	37.00	34	29	3.0	2.5	255000	330000	3.78
30221	105	190	39.00	36	30	3.0	2.5	280000	365000	4.51
30222	110	200	41.00	38	32	3.0	2.5	315000	420000	5.28
30224	120	215	43.50	40	34	3.0	2.5	335000	450000	6.28
30226	130	230	43.75	40	34	4.0	3.0	375000	505000	7.25
30228	140	250	45.75	42	36	4.0	3.0	390000	515000	8.74

FBJ®

Tapered Roller Bearings

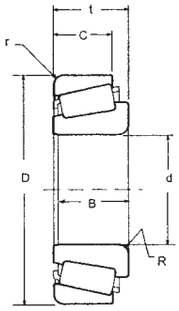

30300 Series

Bearing Number	Dimensions (mm)							Basic Load Ratings (N)		Weight kg
	d	D	t	B	C	r	R	*Cr*	*Cor*	
30302	15	42	14.25	13	11	1.0	1.0	22400	20000	0.095
30303	17	47	15.25	14	12	1.0	1.0	28100	25000	0.130
30304	20	52	16.25	15	13	1.5	1.5	34100	32500	0.170
30305	25	62	18.25	17	15	1.5	1.5	44600	43000	0.260
30306	30	72	20.75	19	16	1.5	1.5	56100	56000	0.390
30307	35	80	22.75	21	18	1.5	2.0	72100	73500	0.520
30308	40	90	25.25	23	20	1.5	2.0	85800	95000	0.720
30309	45	100	27.25	25	22	1.5	2.0	108000	120000	0.970
30310	50	110	29.25	27	23	2.0	2.5	125000	140000	1.250
30311	55	120	31.50	29	25	2.0	2.5	142000	163000	1.550
30312	60	130	33.50	31	26	2.5	3.0	168000	196000	1.950
30313	65	140	36.00	33	28	2.5	3.0	203000	238000	2.55
30314	70	150	38.00	35	30	2.5	3.0	230000	272000	3.06
30315	75	160	40.00	37	31	2.5	3.0	255000	305000	3.57
30316	80	170	42.50	39	33	2.5	3.0	291000	350000	4.41
30317	85	180	44.50	41	34	3.0	4.0	305000	365000	5.20
30318	90	190	46.50	43	36	3.0	4.0	335000	405000	6.03
30319	95	200	49.50	45	38	3.0	4.0	365000	445000	6.98
30320	100	215	51.50	47	39	3.0	4.0	410000	500000	8.56

30300D Series

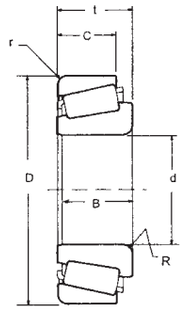

Tapered Roller Bearings

Bearing Number	Dimensions (mm)							Basic Load Ratings (N)		Weight kg
	d	D	t	B	C	r	R	*Cr*	*Cor*	
30303D	17	47	15.25	14	10.5	1.0	1.0	28100	25000	0.130
30304D	20	52	16.25	15	11.5	1.5	1.5	34100	32500	0.170
30305D	25	62	18.25	17	13	1.5	1.5	39800	42500	0.256
30306D	30	72	20.75	19	14	1.5	1.5	41500	49000	0.378
30307D	35	80	22.75	21	15	1.5	2.0	62000	68000	0.490
30308D	40	90	25.25	23	17	1.5	2.0	80000	90200	0.700
30309D	45	100	27.25	25	18	1.5	2.0	95000	10700	0.950
30310D	50	110	29.25	27	19	2.0	2.5	115000	133000	1.230
30311D	55	120	31.50	29	21	2.0	2.5	129000	148000	1.530
30312D	60	130	33.50	31	22	2.5	3.0	153000	179000	1.930
30313D	65	140	36.00	33	23	2.5	3.0	176000	209000	2.530
30314D	70	150	38.00	35	25	2.5	3.0	197000	235000	3.000
30315D	75	160	40.00	37	26	2.5	3.0	222000	266000	3.500
30316D	80	170	42.50	39	27	2.5	3.0	236000	282000	4.120
30317D	85	180	44.50	41	28	3.0	4.0	263000	317000	4.540
30318D	90	190	46.50	43	30	3.0	4.0	282000	336000	5.600
30319D	95	200	49.50	45	32	3.0	4.0	310000	375000	6.680
30320D	100	215	51.50	47	34	3.0	4.0	318000	391000	8.020

FBJ®

Tapered Roller Bearings

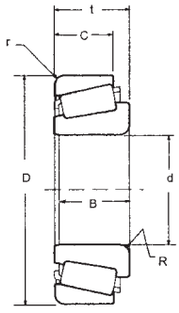

32000 Series

Bearing Number	Dimensions (mm)							Basic Load Ratings (N)		Weight kg
	d	D	t	B	C	r	R	*Cr*	*Cor*	
32005	25	47	15.00	15	11.5	0.8	0.8	27000	32500	0.11
32006	30	55	17.00	17	13.0	1.0	1.0	35800	44000	0.17
32007	35	62	18.00	18	14.0	1.0	1.0	42900	54000	0.22
32008	40	68	19.00	18	14.5	1.0	1.0	52800	7100	0.27
32009	45	75	20.00	20	15.5	1.0	1.0	58300	80000	0.34
32010	50	80	20.00	20	15.5	1.0	1.0	60500	68000	0.37
32011	55	90	23.00	23	17.5	1.5	1.5	80500	118000	0.583
32012	60	95	23.00	23	17.5	1.5	1.5	82000	123000	0.576
32013	65	100	23.00	23	17.5	1.5	1.5	83000	128000	0.63
32014	70	110	25.00	25	19.0	1.5	1.5	105000	160000	0.848
32015	75	115	25.00	25	19.0	1.5	1.5	108000	167000	0.909
32016	80	125	29.00	29	22.0	1.5	1.5	139000	218000	1.28
32017	85	130	29.00	29	22.0	1.5	1.5	142000	224000	1.35
32018	90	140	32.00	32	24.0	1.5	1.5	168000	270000	1.78
32019	95	145	32.00	32	24.0	1.5	2.0	171000	280000	1.83
32020	100	150	32.00	32	24.0	1.5	2.0	170000	281000	191
32021	105	160	35.00	35	26.0	1.5	2.0	201000	336000	2.42
32022	110	170	38.00	38	29.0	2.0	2.5	236000	390000	3.07
32024	120	180	38.00	38	29.0	2.0	2.5	245000	420000	3.25
32026	130	200	45.00	42	36.0	2.0	2.5	269000	445000	4.67
32028	140	210	45.0	42	36.0	2.0	2.5	278000	470000	4.95

32200 Series

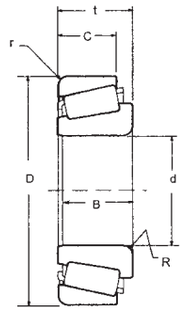

Tapered Roller Bearings

Bearing Number	Dimensions (mm)							Basic Load Ratings (N)		Weight kg
	d	D	t	B	C	r	R	*Cr*	*Cor*	
32204	20	47	19.25	18	15	1.0	1.0	28200	29000	0.16
32205	25	52	19.25	18	15	1.0	1.0	35800	44000	0.19
32206	30	62	21.25	20	17	1.0	1.0	50100	57000	0.28
32207	35	72	24.25	23	19	1.5	1.5	66000	78000	0.43
32208	40	80	24.75	23	19	1.5	1.5	74800	86500	0.53
32209	45	85	24.75	23	19	1.5	1.5	80900	98000	0.58
32210	50	90	24.75	23	19	1.5	1.5	825000	100000	0.61
32211	55	100	25.75	25	21	1.5	2.0	106000	129000	0.83
32212	60	110	29.75	28	24	1.5	2.0	125000	160000	1.15
32213	65	120	32.75	31	27	1.5	2.0	151000	193000	1.50
32214	70	125	33.25	31	27	1.5	2.0	157000	208000	1.60
32215	75	130	33.25	31	27	1.5	2.0	161000	212000	1.70
32216	80	140	35.25	33	28	2.0	2.5	187000	245000	2.05
32217	85	150	38.50	36	30	2.0	2.5	224000	300000	2.75
32218	90	16	42.50	40	34	2.0	2.5	262000	360000	3.49
32219	95	170	45.50	43	37	3.0	2.5	299000	415000	4.3
32220	100	180	49.00	46	39	3.0	2.5	330000	465000	5.12
32221	105	190	53.00	50	43	3.0	2.5	360000	510000	6.25
32222	110	200	56.00	53	46	3.0	2.5	400000	565000	7.35
32224	120	215	61.50	58	50	3.0	2.5	440000	635000	9.00
32226	130	230	67.75	64	54	4.0	3.0	530000	790000	11.30
32228	140	250	71.75	68	58	4.0	3.0	610000	915000	14.30

FBJ®

Tapered Roller Bearings

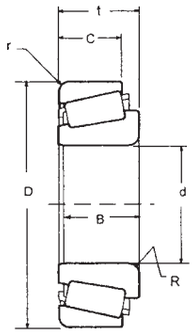

32300 Series

Bearing Number	Dimensions (mm)							Basic Load Ratings (N)		Weight kg
	d	D	t	B	C	r	R	*Cr*	*Cor*	
32303	17	47	20.25	19	16	1	1	34700	33500	0.17
32304	20	52	22.25	21	18	1.5	1.5	44000	45500	0.23
32305	25	62	25.25	24	20	1.5	1.5	60500	63000	0.36
32306	30	72	28.75	27	23	1.5	1.5	76500	85000	0.55
32307	35	80	32.75	31	25	1.5	2.0	93500	114000	0.80
32308	40	90	35.25	33	27	1.5	2.0	108000	140000	1.10
32309	45	100	38.25	36	30	1.5	2.0	134000	176000	1.45
32310	50	110	42.25	40	33	2.0	2.5	161000	216000	1.85
32311	55	120	45.50	43	35	2.0	2.5	19000	260000	2.50
32312	60	130	48.50	46	37	2.5	3.0	220000	305000	2.80
32313	65	140	51	48	39	2.5	3.0	275000	356000	3.64
32314	70	150	54	51	42	2.5	3.0	310000	405000	4.46
32315	75	160	58	55	45	2.5	3.0	355000	470000	5.35
32316	80	170	61.5	58	48	2.5	3.0	395000	525000	6.41
32317	85	180	63.5	60	49	3.0	4.0	405000	525000	7.15
32318	90	190	67.5	64	53	3.0	4.0	450000	595000	8.57
32319	95	200	71.5	67	55	3.0	4.0	505000	670000	10.1
32320	100	215	77.5	73	60	3.0	4.0	570000	777000	12.7

33000 Series

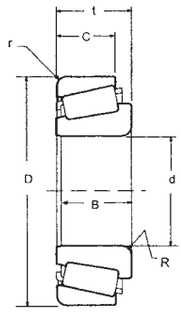

Tapered Roller Bearings

Bearing Number	Dimensions (mm)							Basic Load Ratings (N)		Weight kg
	d	D	t	B	C	r	R	*Cr*	*Cor*	
33009	45	75	24	24	19	1	1	72000	104000	0.432
33010	50	80	24	24	19	1	1	75000	114000	0.470
33011	55	90	27	27	21	1.5	1.5	93000	143000	0.673
33012	60	95	27	27	21	1.5	1.5	96500	150000	0.73
33013	65	100	27	27	21	1.5	1.5	100000	163000	0.84
33014	70	110	31	31	25.5	1.5	1.5	137000	224000	1.14
33015	75	115	31	31	25.5	1.5	1.5	140000	232000	1.12
33016	80	125	36	36	29.5	1.5	1.5	176000	290000	1.67
33017	85	130	36	36	29.5	1.5	1.5	183000	315000	1.73
33018	90	140	39	39	32.5	2	1.5	216000	365000	2.48
33019	95	145	39	39	32.5	2	1.5	220000	380000	2.33
33020	100	150	39	39	32.5	2	1.5	224000	400000	2.42
33021	105	160	43	43	34	2.5	2	265000	450000	3.34
33022	110	170	47	47	37	2.5	2	300000	520000	4.16
33024	120	180	48	48	38	2.5	2	310000	560000	4.55

FBJ®

Tapered Roller Bearings

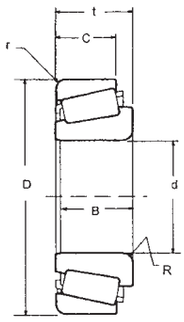

33100 & 33200 Series

Bearing Number	Dimensions (mm)							Basic Load Ratings (N)		Weight kg
	d	D	t	B	C	r	R	*Cr*	*Cor*	
33108	40	75	26	26	20.5	1.5	1.5	79500	103000	0.494
33109	45	80	26	26	20.5	1.5	1.5	84500	115000	0.495
33110	50	85	26	26	20.0	1.5	1.5	86500	121000	0.58
33111	55	95	30	30	23.0	1.5	1.5	111000	155000	0.846
33112	60	100	30	30	23.0	1.5	1.5	113000	164000	0.912
33113	65	110	34	34	26.5	1.5	1.5	144000	211000	1.28
33114	70	120	37	37	29.0	1.5	2.0	176000	260000	1.73
33115	75	125	37	37	29.0	1.5	2.0	180000	275000	1.82
33116	80	130	37	37	29.0	1.5	2.0	190000	300000	1.93
33117	85	140	41	41	32.0	1.5	2.5	220000	355000	2.5
33118	90	150	45	45	35.0	1.5	2.5	265000	425000	3.22
33205	25	52	22	22	18.0	2.0	1.0	47500	57500	0.217
33206	30	62	25	25	19.5	2.0	1.0	65000	77000	0.344
33207	35	72	28	28	22.0	1.5	1.5	87500	109000	0.531
33208	40	80	32	32	25.0	1.5	1.5	103000	132000	0.728
33209	45	85	32	32	25.0	1.5	1.5	107000	141000	0.783
33210	50	90	32	32	24.5	1.5	1.5	115000	158000	0.852
33211	55	100	35	35	27.0	1.5	2.0	138000	188000	1.15
33212	60	110	38	38	29.0	1.5	2.0	167000	234000	1.55
33213	65	120	41	41	32.0	1.5	2.0	195000	265000	1.98
33214	70	125	41	41	32.0	1.5	2.0	201000	282000	2.1
33215	75	130	41	41	31.0	1.5	2.0	208000	298000	2.2
33216	80	140	46	46	35.0	2.0	2.5	250000	365000	2.92
33217	85	150	49	49	37.0	2.0	2.5	284000	420000	3.58

Single Row (Inch)
12.700~22.606mm
0.5000~0.8900inch

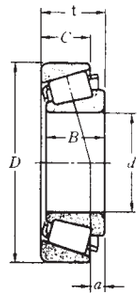

Tapered Roller Bearings

Bearing Number	Dimensions					Basic Load Ratings		Limiting Speeds		Weight
	mm inch					N lbf		rev/min		kg lb
	d	D	t	B	C	*Cr*	*Cor*	Grease	Oil	
A4050/ **A4138**	12.700 0.5000	34.988 1.3775	10.998 0.4330	10.988 0.4326	8.730 0.3437	12300 2770	11600 2600	12000	16000	0.053 0.117
A4059/ **A4138**	14.989 0.5901	34.988 1.3775	10.998 0.4330	10.988 0.4326	8.730 0.3437	12300 2770	11600 2600	12000	16000	0.049 0.108
03062/ **03162**	15.875 0.6250	41.275 1.6250	14.288 0.5625	14.681 0.5780	11.112 0.4375	20300 4550	18700 4200	10000	13000	0.092 0.203
11590/ **11520**	15.875 0.6250	42.862 1.6875	14.288 0.5625	14.288 0.5625	9.525 0.3750	17600 3950	17500 3950	8700	12000	0.103 0.227
17580 **17520**	15.875 0.6250	42.862 1.6875	16.670 0.6563	16.670 0.6563	13.495 0.5313	26700 6000	26000 5850	9800	13000	0.122 0.269
05062/ **05185**	15.875 0.6250	47.000 1.8504	14.381 0.5662	14.381 0.5662	11.112 0.4375	24000 5400	24200 5450	8600	11000	0.131 0.289
09062/ **09195**	15.875 0.6250	49.225 1.9380	19.845 0.7813	21.539 0.8480	14.288 0.5625	38500 8600	39000 8700	8500	11000	0.203 0.448
05066/ **05185**	16.993 0.6690	47.000 1.8504	14.381 0.5662	14.381 0.5662	11.112 0.4375	24000 5400	24200 5450	8600	11000	0.127 0.280
LM11749/ **LM11710**	17.462 0.6875	39.878 1.5700	13.843 0.5450	14.605 0.5750	10.688 0.4200	23800 5350	24200 5450	10000	13000	0.084 0.185
A6075/ **A6157**	19.050 0.7500	39.992 1.5745	12.014 0.4730	11.153 0.4391	9.525 0.3750	12800 2880	12800 2870	10000	13000	0.065 0.143
LM11949/ **LM11910**	19.050 0.7500	45.237 1.7810	15.494 0.6100	16.637 0.6550	12.065 0.4750	28300 6350	28600 6450	8900	12000	0.122 0.269
05075/ **05185**	19.050 0.7500	47.000 1.8504	14.381 0.5662	14.381 0.5662	11.112 0.4375	24000 5400	24200 5450	8600	11000	0.121 0.267
09067/ **09195**	19.050 0.7500	49.225 1.9380	18.034 0.7100	19.050 0.7500	14.288 0.5625	38500 8600	39000 8700	8500	11000	0.179 0.395
09074/ **09195**	19.050 0.7500	49.225 1.3980	19.845 0.7813	21.539 0.8480	14.288 0.5625	38500 8600	39000 8700	8500	11000	0.188 0.414
09078 **09195**	19.050 0.7500	49.225 1.9380	19.845 0.7813	21.539 0.8480	14.288 0.5625	38500 8600	39000 8700	8500	11000	0.188 0.414
09067/ **09194**	19.050 0.7500	49.225 1.9380	21.209 0.8350	19.050 0.7500	17.462 0.6875	38500 8600	39000 8700	8500	11000	0.195 0.430
09067/ **09196**	19.050 0.7500	49.225 1.9380	21.209 0.8350	19.050 0.7500	17.462 0.6875	38500 8600	39000 8700	8500	11000	0.198 0.437
21075/ **21212**	19.050 0.7500	53.975 2.1250	22.225 0.8750	21.839 0.8598	15.875 0.6250	40000 9050	39000 8700	8000	11000	0.248 0.547
1775/ **1729**	19.050 0.7500	56.896 2.2400	19.368 0.7625	19.837 0.7810	15.875 0.6250	42500 9600	46500 10400	7200	9600	0.272 0.600
05079/ **05185**	19.987 0.7869	47.000 1.8504	14.381 0.5662	14.381 0.5662	11.112 0.4375	24000 5400	24200 5450	8600	11000	0.117 0.258
07079/ **07196**	20.000 0.7874	50.005 1.9687	13.495 0.5313	14.260 0.5614	9.525 0.3750	26000 5850	27900 6300	7500	10000	0.138 0.304
09081/ **09195**	20.625 0.8120	49.225 1.9380	19.845 0.7813	21.539 0.8480	14.288 0.5625	38500 8600	39000 8700	8500	11000	0.179 0.395
12580/ **12520**	20.638 0.8125	49.225 1.9380	19.845 0.7813	19.845 0.7813	15.875 0.6250	37500 8400	39000 8750	8200	11000	0.182 0.401
M12649/ **M12610**	21.430 0.8437	50.005 1.9687	17.526 0.6900	18.288 0.7200	13.970 0.5500	38000 8500	39000 8750	8000	11000	0.169 0.373
LM127749/ **LM12711**	21.986 0.8656	45.974 1.8100	15.494 0.6100	16.637 0.6550	12.065 0.4750	29600 6650	34000 7600	8400	11000	0.123
07087/ **07196**	22.225 0.8750	50.005 1.9687	13.495 0.5313	14.260 0.5614	9.525 0.3750	26000 5850	27900 6300	7500	10000	0.130 0.287
M12648/ **M12610**	22.225 0.8750	50.005 1.9687	17.526 0.6900	18.288 0.7200	13.970 0.5500	38000 8500	39000 8750	8000	11000	0.165 0.364
1380/ **1328**	22.225 0.8750	52.388 2.0625	19.368 0.7625	20.168 0.7940	14.288 0.5625	40500 9150	43000 9600	7600	10000	0.200 0.441
1380/ **1329**	22.225 0.8750	53.975 2.1250	19.368 0.7625	20.168 0.7940	14.288 0.5625	40500 9150	43000 9600	7600	10000	0.215 0.474
1755/ **1729**	22.225 0.8750	56.896 2.2400	19.368 0.7625	19.837 0.7810	15.875 0.6250	42500 9600	46500 10400	7200	9600	0.256 0.564
1280/ **1220**	22.225 0.8750	57.150 2.250	22.225 0.8750	22.225 0.8750	17.462 0.6875	47000 10600	49500 11100	7100	9500	0.286 0.631
LM72849/ **LM72810**	22.606 0.8900	47.000 1.8504	15.500 0.6102	15.500 0.6102	12.000 0.4724	27500 6150	32500 7300	8200	11000	0.125 0.276

FBJ®

Tapered Roller Bearings

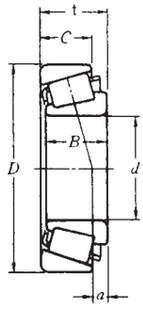

Single Row (Inch)
23.812~28.575mm
0.9375~1.125inch

Bearing Number	Dimensions					Basic Load Ratings		Limiting Speeds		Weight
	mm inch					N lbf		rev/min		kg lb
	d	D	t	B	C	*Cr*	*Cor*	Grease	Oil	
07093/ 07196	23.812 0.9375	50.005 1.9687	13.495 0.5313	14.260 0.5614	9.525 0.3750	26000 5850	27900 6300	7500	10000	0.123 0.271
L44640/ L44610	23.812 0.9375	50.292 1.9800	14.224 0.5600	14.732 0.5800	10.668 0.4200	28800 6500	34000 7600	7400	9900	0.137 0.302
1779/ 1729	23.812 0.9375	56.896 2.2400	19.368 0.7625	19.837 0.7810	15.875 0.6250	42500 9600	46500 10400	7200	9600	0.247 0.545
07098/ 07196	24.981 0.9835	50.005 1.9687	13.495 0.5313	14.260 0.5614	9.525 0.3750	26000 5850	27900 6300	7500	10000	0.118 0.260
07097/ 07196	25.000 0.9843	50.005 1.9687	13.495 0.5313	14.260 0.5614	9.525 0.3750	26000 5850	27900 6300	7500	10000	0.118 0.260
07096/ 07196	25.159 0.9905	50.005 1.9687	13.495 0.5313	14.260 0.5614	9.525 0.3750	26000 5850	27900 6300	7500	10000	0.1117 0.258
07100 07196	25.400 1.0000	50.005 1.9687	13.495 0.5313	14.260 0.5614	9.525 0.3750	26000 5850	27900 6300	7500	10000	0.1117 0.258
07100S/ 07196	25.400 1.0000	50.005 1.9687	13.495 0.5313	14.260 0.5614	9.525 0.3750	26000 5850	27900 6300	7500	1000	0.116 0.258
L44643/ L44610	25.400 1.0000	50.292 1.9800	14.224 0.5600	14.732 0.5800	10.688 0.4200	28800 6500	34000 7600	7400	9900	0.130 0.287
07100/ 07204	25.400 1.0000	51.994 2.0470	15.011 0.5910	14.260 0.5614	12.700 0.5000	26000 5850	27900 6300	7500	10000	0.3144 0.317
1780/ 1729	25.400 1.0000	56.896 2.2400	19.368 0.7625	19.837 0.7810	15.875 0.6250	42500 9600	46500 10400	7200	9600	0.238 0.525
M84548/ M84510	25.400 1.0000	57.150 2.2500	19.431 0.7650	19.431 0.7650	14.732 0.5800	42000 9500	48500 11000	6900	9200	0.241 0.531
M84249 M84210	25.400 1.0000	59.530 2.3437	23.368 0.9200	23.114 0.9100	18.288 0.7200	50000 11200	57500 13000	6800	9100	0.324 0.714
15578/ 15523	25.400 1.0000	60.325 2.3750	19.842 0.7812	17.462 0.6875	15.875 0.6250	39500 8900	45500 10200	6700	8900	0.271 0.597
15101/ 15243	25.400 1.0000	61.912 2.4375	19.050 0.7500	20.638 0.8125	14.288 0.5625	46500 10500	54000 12200	6100	8200	0.300 0.661
15100/ 15245	25.400 1.0000	62.000 2.4409	19.050 0.7500	20638 0.8125	14.288 0.5625	46500 10500	54000 12200	6100	8200	0.299 0.659
15101/ 15245	25.400 1.0000	62.000 2.4409	19.050 0.7500	20.638 0.8125	14.288 0.5625	46500 10500	54000 12200	6100	8200	0.301 0.664
15102 15245	25.400 1.0000	62.000 2.4409	19.050 0.7500	20638 0.8125	14.288 0.5625	46500 10500	54000 12200	6100	8200	0.301 0.664
15101/ 15244	25.400 1.0000	62.000 2.4409	20.638 0.8125	20.638 0.8125	15.875 0.6250	46500 10500	54000 12200	6100	8200	0.315 0.694
15101 15250	25.400 1.0000	63500 2.5000	20.638 0.8125	20.638 0.6250	15.875	46500 10500	54000 12200	6100	8200	0.333 0.734
15101/ 15250X	25.400 1.0000	63.500 2.5000	20.638 0.8125	20.638 0.8125	15.875 0.6250	46500 10500	54000 12200	6100	8200	0.333 0.734
M86643/ M86610	25.400 1.0000	64.292 2.5312	21.433 0.8438	21.433 0.8438	16.670 0.6563	51500 11600	64500 14600	6100	8100	0.371 0.818
23100 23256	25.400 1.0000	65.088 2.5625	22.225 0.8750	21.463 0.8450	15.875 0.6250	47000 10600	50500 11400	5700	7600	0.360 0.794
2687/ 2631	25.400 1.0000	66.421 2.6150	23.812 0.9375	25.433 1.0013	19.050 0.7500	64500 14400	72500 16300	6200	8200	0.442 0.974
15103 15245	26.157 1.0298	62.000 2.4409	19.050 0.7500	20.638 0.8125	14.288 0.5625	46500 10500	54000 12200	6100	8200	0.296 0.653
2682/ 2631	26.162 1.0300	66.421 2.6150	23.812 0.9375	25.433 1.0013	19.050 0.7500	64500 14400	72500 16300	6200	8200	0.436 0.961
L44649/ L44610	26.988 1.0625	50.292 1.9800	14.224 0.5600	14.732 0.5800	10.668 0.4200	28800 6500	34000 79600	7400	9900	0.120 0.265
15580/ 15523	26.988 1.0625	60.325 2.3750	19.842 0.7812	17.462 0.6875	15.875 0.6250	39500 8900	45500 10200	6700	8900	0.260 0.573
15106/ 15245	26.988 1.0625	62.000 2.4409	19.050 0.7500	20.638 0.8125	14.288 0.5625	46500 10500	54000 12200	6100	8200	0.291 0.642
2688/ 2631	26.988 1.0625	66.421 2.6150	23.812 0.9375	25.433 1.0013	19050 0.7500	64500 14400	72500 16300	6200	8200	0.429 0.946
1985/ 1930	28.575 1.1250	56.896 2.2400	19.845 0.7813	19.355 0.7620	15.875 0.6250	40500 9150	4450 10000	6700	8900	0.217 0.478
15590 15520	28.575 1.1250	57.150 2.2500	17.462 0.6875	17.462 0.6875	13.495 0.5313	39500 8900	45500 10200	6700	8900	0.196 0.432
1985/ 1932	28.575 1.1250	58.738 2.3125	19.050 0.7500	19.355 0.7620	15.080 0.5937	40500 9150	44500 10000	6700	8900	0.230 0.507
1988/ 1932	28.575 1.1250	58.738 2.3125	19.050 0.7500	19.355 0.7620	15.080 0.5937	40500 9150	44500 10000	6700	8900	0.228 0.503

Single Row (Inch)
28.575~31.750mm
1.1250~1.2500inch

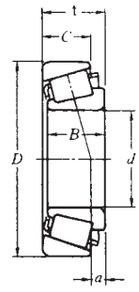

Tapered Roller Bearings

Bearing Number	Dimensions (mm / inch)					Basic Load Ratings (N / lbf)		Limiting Speeds (rev/min)		Weight (kg / lb)
	d	D	t	B	C	*Cr*	*Cor*	Grease	Oil	
15590/ 15523	28.575 1.1250	60.325 2.3750	19.842 0.7812	17.462 0.6875	15.875 0.6250	39500 8900	45500 10200	6700	8900	0.250 0.551
1985/ 1931	28.575 1.1250	60.235 2.3750	19.845 0.7813	19.355 0.7620	15.875 0.6250	40500 9150	44500 10000	6700	8900	0.255 0.562
15112/ 15245	28.575 1.1250	62.000 2.4409	19.050 0.7500	20.638 0.8125	14.288 0.5625	46500 10500	54000 12200	6100	8200	0.277 0.611
15113/ 15245	28.575 1.1250	62.000 2.4409	19.050 0.7500	20.638 0.8125	14.288 0.5625	46500 10500	54000 12200	6100	8200	0.280 0.617
M86647/ M86610	28.575 1.1250	64.292 2.5312	21.433 0.8438	21.433 0.8438	16.670 0.6563	51500 11600	64500 14600	6100	8100	0.348 0.747
2689/ 2631	28.575 1.1250	66.421 2.6150	23.812 0.9375	25.433 1.0013	19.050 0.7500	64500 14400	72500 16300	6200	8200	0.416 0.917
02471/ 02420	28.575 1.1250	68.262 2.6875	22.225 0.8750	22.225 0.8750	17.462 0.6875	57000 12800	67000 15100	5800	7700	0.409 0.902
2474/ 2420	28.575 1.1250	68.262 2.6875	22.225 0.8750	23.812 0.9375	17.462 0.6875	57500 12900	65500 14800	5700	7700	0.410 0.904
2578/ 2523	28.575 1.1250	69.850 2.7500	23.812 0.9375	25.357 0.9983	19.050 0.7500	69000 15500	81500 18300	5700	7600	0.483 1.07
41125/ 41286	28.575 1.1250	72.626 2.8593	24.608 0.9688	24.257 0.9550	17.462 0.6875	58000 13100	55500 12500	5800	7700	0.477 1.05
41126/ 41286	28.575 1.1250	72.626 2.8593	24.608 0.9688	24.257 0.9550	17.462 0.6875	58000 13100	55500 12500	5800	7700	0.481 1.06
02872/ 02820	28.575 1.1250	73.025 2.8750	22.225 0.8750	22.225 0.8750	17.462 0.6875	56500 12700	68000 15300	5300	7000	0.480 1.06
L45449/ L45410	29.000 1.1417	50.292 1.9800	14.224 0.5600	14.732 0.5800	10.668 0.4200	28000 6300	35500 8000	7200	9600	0.113 0.249
2690/ 2631	29.367 1.1562	66.421 2.6150	23.812 0.9375	25.433 1.0013	19.050 0.7500	64500 14400	72500 16300	6200	8200	0.406 0.895
17118/ 17244	29.987 1.1806	62.000 2.4409	16.002 0.6300	16.566 0.6522	14.288 0.5625	39000 8750	42000 9500	6300	8400	0.228 0.503
15117/ 15245	29.987 1.1806	62.000 2.4409	19.050 1.7500	20.638 0.8125	14.288 0.5625	46500 10500	54000 12200	6100	8200	0.269 0.593
14117A/ 14276	30.000 1.1811	69.012 2.7170	19.845 0.7813	19.583 0.7710	15.875 0.6250	48500 10800	58000 13000	5600	7400	0.369 0.813
JHM88540/ JHM88513	30.000 1.1811	72.000 2.8346	29.370 1.1563	27.783 1.0938	23.020 0.9063	72000 16200	97000 21800	5400	7100	0.619 1.37
15116/ 15245	30.112 1.1855	62.000 2.4409	19.050 0.7500	20.638 0.8125	14.288 0.5625	46500 10500	54000 12200	6100	8200	0.268 0.591
17119/ 17244	30.162 1.1875	62.000 2.4409	16.002 0.6300	16.566 0.6522	14.288 0.5625	39000 8750	42000 9500	6300	8400	0.226 0.498
M86649/ M86610	30.162 1.1875	64.292 2.5312	21.433 0.8438	21.433 0.8438	16.670 0.6563	51500 11600	64500 14600	6100	8100	0.336 0.741
2558/ 2523	30.162 1.1875	69.850 2.7500	23.812 0.9375	25.357 0.9938	19.050 0.7500	69000 15500	81500 18300	5700	7600	0.468 1.03
3187/ 3120	30.162 1.1875	72.626 2.8593	30.162 1.1875	29.997 1.1810	23.812 0.9375	84500 19000	98000 22000	5500	7300	0.621 1.37
15118/ 15245	30.213 1.1895	62.000 2.4409	19.050 0.7500	20.638 0.8125	14.288 0.5625	46500 10500	54000 12200	6100	8200	0.265 0.584
15119/ 15245	30.213 1.1895	62.000 2.4409	19.050 0.7500	20.638 0.8125	14.288 0.5625	46500 10500	54000 12200	6100	8200	0.267 0.589
15120 15245	30.213 1.1895	62.000 2.4409	19.050 0.7500	20.638 0.8125	14.288 0.5625	46500 10500	54000 12200	6100	8200	0.267 0.589
14116/ 14274	30.226 1.1900	69.012 2.7170	19.845 0.7813	19.583 0.7710	15.875 0.6250	48500 10800	58000 13000	5600	7400	0.366 0.807
14116/ 14276	30.226 1.1900	69.012 2.7170	19.845 0.7813	19.583 0.7710	15.875 0.62500	48500 10800	58000 13000	5600	7400	0.370 0.816
14116/ 14283	30.226 1.1900	72.085 2.8380	22.385 0.8813	19.583 0.7710	18.415 0.7250	48500 10800	58000 13000	5600	7400	0.447 0.985
LM67048/ LM67010	31.750 1.1250	59.131 2.3280	15.875 0.6250	16.764 0.6600	11.811 0.4650	38500 7750	41000 9200	6300	8400	0.182 0.401
15123/ 15245	31.750 1.1250	62.000 2.4409	18.161 0.7150	19.050 0.7500	14.288 0.5625	46500 10500	54000 12200	6100	8200	0.244 0.538
15125/ 15245	31.750 1.1250	62.000 2.4409	19.050 0.7500	20.638 0.8125	14.288 0.5625	46500 10500	54000 12200	6100	8200	0.253 0.558
15126/ 15245	31.750 1.1250	62.00 2.4409	19.050 0.7500	20.638 0.8125	14.288 0.5625	46500 10500	54000 12200	6100	8200	0.255 0.562

FBJ®

Tapered Roller Bearings

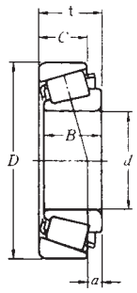

Single Row (Inch)
31.750mm~34.925mm
1.2500~1.375 inch

Bearing Number	Dimensions					Basic Load Ratings		Limiting Speeds		Weight
	mm inch					N lbf		rev/min		kg lb
	d	D	t	B	C	*Cr*	*Cor*	Grease	Oil	
2580 **2520**	31.750 1.2500	66.421 2.6150	25.400 1.0000	25.357 0.9983	20.638 0.8125	69000 15500	81500 18300	5700	7600	0.409 0.902
02475/ **02420**	31.750 1.2500	68.262 2.6875	22.225 0.8750	22.552 0.8750	17.462 0.6875	57000 12800	67000 15100	5800	7700	0.380 0.838
02476/ **02420**	31.750 1.2500	68.262 2.6875	22.225 0.8750	22.225 0.8750	17.462 0.6875	57000 12800	67000 15100	5800	7700	0.383 0.844
14124/ **14276**	31.750 1.2500	69.012 2.7170	19.845 0.7813	19.583 0.7710	15.875 0.6250	48500 10800	58000 13000	5600	7400	0.359 0.791
14125A/ **14276**	31.750 1.2500	69.012 2.7170	19.845 0.7813	19.583 0.7710	15.875 0.6250	48500 10800	58000 13000	5600	7400	0.356 0.785
2580/ **2523**	31.750 1.2500	69.850 2.7500	23.812 0.9375	25.357 0.9983	19.050 0.7500	69000 15500	81500 18300	5700	7600	0.454 1.00
2580/ **2523S**	31.750 1.2500	69.850 2.7500	23.812 0.9375	25.357 0.9983	19.050 0.7500	69000 15500	81500 18300	5700	7600	0.453 0.999
2582/ **2523**	31.750 1.2500	69.850 2.7500	23.812 0.9375	25.357 0.9983	19.050 0.7500	69000 15500	81500 18300	5700	7600	0.451 0.994
3188/ **3120**	31.750 1.2500	72.626 2.8593	30.162 1.1875	29.997 1.1810	23.812 0.9375	84500 19000	98000 22000	5500	7300	0.603 1.33
3193/ **3120**	31.750 1.2500	72.626 2.8593	30.162 1.1875	29.997 1.1810	23.812 0.9375	84500 19000	98000 22000	5500	7300	0.601 1.33
02875/ **02820**	31.750 1.2500	73.025 2.8750	22.225 0.8750	22.225 0.8750	17.462 0.6875	56500 12700	68000 15300	5300	7000	0.451 0.994
02879/ **02820**	31.750 1.2500	73.025 2.8750	22.225 0.8750	23.812 0.9375	17.462 0.6875	62500 14100	75500 17000	5200	7000	0.465 1.03
HM88542/ **HM88510**	31.750 1.2500	73.025 2.8750	29.370 1.1563	27.783 1.0938	23.020 0.9063	72000 16200	97000 21800	5400	7100	0.622 1.37
HM88542/ **HM88512**	31.750 1.2500	73.025 2.9060	29.370 1.1563	27.783 1.0938	23.020 0.9063	72000 16200	97000 21800	5400	7100	0.638 1.41
HM89440/ **HM89410**	31.750 1.2500	76.200 3.0000	29.370 1.1563	28.575 1.1250	23.020 0.9063	78000 17500	105000 27300	5100	6800	0.686 1.51
3476/ **3420**	31.750 1.2500	79.375 3.1250	29.370 1.1563	29.771 1.1721	23.812 0.9375	93000 20900	114000 25600	4900	6600	0.767 1.69
M88048/ **M88010**	33.338 1.3125	68.262 2.6875	22.225 0.8750	22.225 0.8750	17.462 0.6875	56500 12700	71000 16000	5700	7500	0.378
14130/ **14276**	33.338 1.3125	69.012 2.7170	19.845 0.7813	19.583 0.7710	15.875 0.6250	48500 10800	58000 13000	5600	7400	0.344 0.758
14131/ **14276**	33.338 1.3125	69.012 2.7170	19.845 0.7813	19.583 0.7710	15.875 0.6250	48500 10800	58000 13000	5600	7400	0.346 0.763
2585/ **2523**	33.338 1.3125	69.850 2.7500	23.812 0.9375	25.357 0.9983	190.50 0.7500	69000 15500	81500 18300	5700	7600	0.435 0.959
3196/ **3120**	33.338 1.3125	72.626 2.8593	30.162 1.1875	29.997 1.1810	23.812 0.9375	84500 19000	98000 22000	5500	7300	0.581 1.28
HM88547/ **HM88510**	33.338 1.3125	73.025 2.8750	29.370 1.1563	27.783 1.0938	23.020 0.9038	72000 16200	97000 21800	5400	7100	0.604 1.33
2785/ **2720**	33.338 1.3125	76.200 3.0000	23.812 0.9375	25.654 1.0100	19.050 0.7500	73000 16400	90500 20300	5100	6800	0.551 1.22
2790/ **2720**	33.338 1.3125	76.200 3.0000	23.812 0.9375	25.654 1.0100	19.050 0.7500	73000 16400	90500 20300	5100	6800	0.553 1.22
HM89443/ **HM89410**	33.338 1.3125	76.200 3.0000	29.370 1.1563	28.575 1.1250	23.020 0.9063	78000 17500	105000 23700	5100	6800	0.668 1.47
HM89444/ **HM89410**	33.338 1.3125	76.200 3.0000	29.370 1.1563	28.575 1.1250	23.020 0.9063	78000 17500	105000 23700	5100	6800	0.665 1.47
43131/ **43312**	33.338 1.3125	79.375 3.1250	25.400 1.0000	24.074 0.9478	17.462 0.6875	65500 14700	67000 15000	4600	6200	0.568 1.25
LM48548/ **LM48510**	34.925 1.3750	65.088 2.5625	18.034 0.7100	18.288 0.7200	13.970 0.5500	46500 10500	56000 12600	5700	7600	0.249 0.549
LM48548A/ **LM48510**	34.925 1.3750	65.088 2.5625	18.034 0.7100	18.288 0.7200	13.970 0.5500	46500 10400	56000 12600	5700	7600	0.252 0.556
14137A/ **14276**	34.925 1.350	69.012 2.7170	19.845 0.7813	19.583 0.7710	15.875 0.6250	48500 10800	58000 13000	5600	7400	0.333 0.734
14138A/ **14276**	34.925 1.3750	69.012 2.7170	19.845 0.7813	19.583 0.7710	15.875 0.6250	48500 10800	58000 13000	5600	7400	0.331 0.730
HM88649/ **HM88610**	34.925 1.3150	72.233 2.8438	25.400 1.0000	25.400 1.0000	19.842 0.7812	65000 14600	84500 19000	5400	7200	0.489 1.08
16137/ **16284**	34.925 1.3750	72.238 2.8440	20.638 0.8125	20.638 0.8125	15.875 0.6250	48000 10800	58500 13100	5300	7000	0.385 0.849
02877/ **02820**	34.925 1.3750	73.025 2.8750	22.225 0.8750	22.225 0.8750	17.462 0.6875	56500 12700	68000 15300	5300	7000	0.422 0.930
02878/ **02820**	34.925 1.3750	73.025 2.8750	22.225 0.8750	22.225 0.8750	17.462 0.6875	56500 12700	68000 15300	5300	7000	0.425 0.937

Single Row (Inch)
34.925~36.512mm
1.3750~1.437inch

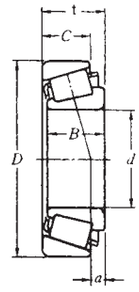

Tapered Roller Bearings

Bearing Number	Dimensions					Basic Load Ratings		Limiting Speeds		Weight
	mm inch					N lbf		rev/min		kg lb
	d	D	t	B	C	*Cr*	*Cor*	Grease	Oil	
2878 **2820**	34.925 1.3750	73.025 2.8750	22.225 0.8750	23.812 0.9375	17.462 0.6875	62500 14100	75500 17000	5200	7000	0.434 0.957
25877/ **25820**	34.925 1.3750	73.025 2.8750	23.812 0.9375	24.608 0.9688	19.050 0.7500	71000 15900	85000 19200	5300	7100	0.471 1.04
25877/ **25821**	34.925 1.3750	73.025 2.8750	23.812 0.9375	24.608 0.9688	19.050 0.7500	71000 15900	85000 19200	5300	7100	0.474 1.05
25878/ **25821**	34.925 1.3750	73.025 2.8750	23.812 0.9375	24.608 0.9688	19.050 0.7500	71000 15900	85000 19200	5300	7100	0.471 1.04
2739/ **2735X**	34.925 1.3750	73.025 2.8750	23.812 0.9375	25.654 1.0100	19.050 0.7500	73000 16400	90500 20300	5100	6800	0.485 0.485
2793/ **2720**	34.925 1.3750	76.200 3.0000	23.812 0.9375	25.654 1.0100	19.050 0.7500	73000 16400	90500 20300	5100	6800	0.536 1.18
2793/ **2729**	34.925 1.3750	76.200 3.0000	23.812 0.9375	25.654 1.0100	19.050 0.7500	73000 16400	90500 20300	5100	6800	0.541 1.19
2796/ **2720**	34.925 1.3750	76.200 3.0000	23.812 0.9375	25.654 1.0100	19.050 0.7500	73000 116400	90500 20300	5100	6800	0.533 1.18
HM89446/ **HM89410**	34.925 1.3750	76.200 3.0000	29.370 1.1563	28.575 1.1250	23.020 0.9063	78000 17500	105000 23700	5100	6800	0.646 1.42
31593/ **31520**	34.925 1.3750	76.200 3.0000	29.370 1.1563	28.575 1.1250	23.812 0.9375	80500 18100	97000 21800	5100	6800	0.625 1.38
31594/ **31521**	34.925 1.3750	76.200 3.0000	29.370 1.1563	28.575 1.1250	23.812 0.9375	80500 18100	97000 21800	5100	6800	0.631 1.39
3478/ **3420**	34.925 1.3750	79.375 3.1250	29.370 1.1563	29.771 1.1721	23.812 0.9375	93000 20900	114000 25600	4900	6600	0.725 1.60
3379 **3320**	34.925 1.3750	80.167 3.1562	29.370 1.1563	30.391 1.1965	23.812 0.9375	95000 21400	112000 25100	4800	6400	0.732 1.61
3872/ **3820**	34.925 1.3750	85.725 3.3750	30.162 1.1875	30.162 1.1875	23.812 0.9375	10500 2360	13200 29600	4500	6000	0.897 1.98
14139/ **14276**	34.976 1.3770	69.012 2.7170	19.845 0.7813	19.583 0.7710	15.875 0.6250	48500 10800	58000 13000	5600	7400	0.333 0.734
L68149/ **L68111**	34.988 1.3775	59.974 2.3612	15.875 0.6250	16.764 0.6600	11.938 0.4700	35500 7950	47500 10700	6100	8100	0.179 0.395
LM78349A/ **LM78310A**	34.988 1.3775	61.973 2.4399	16.700 0.6575	17.000 0.6693	13.600 0.5354	37000 8350	48000 10800	5900	7900	0.209 0.461
LM78349/ **LM78310C**	34.988 1.3775	61.973 2.4399	18.000 0.7087	17000 0.6693	15.000 0.5906	37000 8350	48000 10800	5900	7900	0.218 0.481
JS3549A/ **JS3510**	35.000 1.3780	70.000 2.7559	24.000 0.9449	23.500 0.9525	19.000 0.7480	62000 14000	78000 17500	5500	7300	0.420 0.926
26883/ **26822**	35.000 1.3780	79.375 3.1250	23.812 0.9375	25.400 1.0000	19.050 0.7500	76500 17200	97500 21900	4800	6400	0.610 1.35
339/ **332**	35.000 1.3780	80.000 3.1496	21.000 0.8268	22.403 0.8820	17.826 0.7018	68000 15300	75000 16900	4700	6300	0.534 1.18
HM88648/ **HM88610**	35.717 1.4062	72.233 2.8438	25.400 1.0000	25.400 1.0000	19.842 0.7812	65000 14600	84500 19000	5400	7200	0.478 1.05
HM88648/ **HM88611AS**	35.717 1.4062	72.626 2.8593	25.400 1.0000	25.400 1.000	19.842 0.7812	65000 14600	84500 19000	5400	7200	0.482 1.06
25880/ **25821**	36.487 1.4365	73.025 2.8750	23.812 0.9375	24.608 0.9688	19.050 0.7500	71000 15900	85000 19200	5300	7100	0.457 1.01
2780/ **2720**	36.487 1.4365	76.200 3.0000	23.812 0.9375	25.654 1.0100	19.050 0.7500	73000 16400	90500 20300	5100	6800	0.518 1.14
2794/ **2720**	36.487 1.4365	76.200 3.0000	23.812 0.9375	25.654 1.0100	19.050 0.7500	73000 16400	90500 20300	5100	6800	0.516 1.14
HM89448/ **HM89410**	36.512 1.4375	76.200 3.0000	29.370 1.1563	28.575 1.1250	23.020 0.9063	78000 17500	105000 23700	5100	6800	0.629 1.39
HM89449/ **HM89410**	36.512 1.4375	76.200 3.0000	29.370 1.1563	28.575 1.1250	23.020 0.9063	78000 17500	105000 23700	5100	6800	0.626 1.38
HM89449/ **HM89411**	36.512 1.4375	76.200 3.0000	29.370 1.1563	28.575 1.1250	23.020 0.9063	78000 17500	105000 23700	5100	6800	0.631 1.39
31597/ **31520**	63.512 1.4375	76.200 3.0000	29.370 1.1563	28.575 1.1250	23.812 0.9375	80500 18100	97000 21800	5100	6800	0.605 1.33
HM89249/ **HM89210**	36.512 1.4375	79.375 3.1250	29.370 1.1563	28.829 1.1350	22.664 0.8923	86500 19400	10400 23400	5000	6600	0.686 1.51
3479/ **3420**	36.512 1.4375	79.375 3.1250	29.370 1.1563	29.771 1.1721	23.812 0.9375	93000 20900	114000 25600	4900	6600	0.707 1.56
44143/ **44348**	36.512 1.4375	88.500 3.4843	25.400 1.0000	23.698 0.9330	17.462 0.6875	79500 15900	78000 17500	4900	5300	0.729 1.61

FBJ®

Tapered Roller Bearings

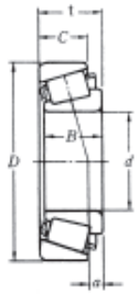

Single Row (Inch)
38.000mm~39.688mm
1.4961~1.5625inch

Bearing Number	Dimensions					Basic Load Ratings		Limiting Speeds		Weight
	mm inch					N lbf		rev/min		kg lb
	d	D	t	B	C	*Cr*	*Cor*	Grease	Oil	
JL69349/ **JL69310**	38.000 1.4961	63.000 2.4803	17.000 0.6693	17.000 0.6693	13.500 0.5315	38500 8700	52500 11800	5700	7600	0.198 0.437
13889/ **13830**	38.100 1.5000	63.500 2.5000	12.700 0.5000	11.908 0.4688	9.525 0.3750	25900 5800	33500 7500	5500	7300	0.147 0.324
LM29748/ **LM29710**	38.100 1.500	65.088 2.5625	18.034 0.7100	18.288 0.7200	13.970 0.5500	43500 9750	57000 12800	5500	7400	0.233 0.514
LM29749/ **LM29710**	38.100 1.5000	65.088 2.5625	18.034 0.7100	18.288 0.7200	13.970 0.5500	43500 9750	57000 12800	5500	7400	0.235 0.518
LM29749/ **LM29711**	38.100 1.50000	65.088 2.5625	19.812 0.7800	18.288 0.7200	15.748 0.6200	43500 9750	57000 12800	5500	7400	0.250 0.551
13685/ **13621**	38.100 1.5000	69.012 2.7170	19.050 0.7500	19.050 0.7500	15.083 0.5938	47500 10700	59500 13400	5300	7100	0.293 0.646
13687/ **13621**	38.100 1.5000	69.012 2.7170	19.050 0.7500	19.050 0.7500	15.083 0.5938	47500 10700	59500 13400	5300	7100	0.296 0.653
19150/ **19281**	38.100 1.5000	71.438 2.8125	15.875 0.6250	16.520 0.6504	11.908 0.4688	43500 9750	51000 11500	5400	7200	0.273 0.602
19150/ **19283**	38.100 1.5000	72.100 2.8346	17.018 0.6700	16.520 0.6504	14.288 0.5625	43500 9750	51000 11500	5400	7200	0.300 0.661
16150/ **16282**	38.100 1.5000	72.000 2.8346	19.000 0.7480	20.638 0.8125	14.237 0.5605	48000 10800	58500 13100	5300	7000	0.331 0.730
16150/ **16284**	38.100 1.5000	72.238 2.8440	20.638 0.8125	20.638 0.8125	15.875 0.6250	48000 10800	58500 13100	5300	7000	0.355 0.783
28150/ **28300**	38.100 1.5000	76.200 3.0000	20.638 0.8125	20.940 0.844	15.507 0.6105	55500 12500	63000 14200	5000	6700	0.405 0.893
2776/ **2720**	38.100 1.5000	76.200 3.0000	23.812 0.9375	25.654 1.0100	19.050 0.7500	73000 16400	90500 20300	5100	6800	0.495 1.09
2777/ **2720**	38.100 1.5000	76.200 3.0000	23.812 0.9375	25.654 1.0100	19.050 0.7500	73000 16400	90500 20300	5100	6800	0.492 1.09
2788/ **2720**	38.100 1.5000	76.200 3.0000	23.812 0.9375	25.654 1.0100	19.050 0.7500	73000 16400	90500 20300	5100	6800	0.497 1.10
2788A/ **2720**	38.100 1.5000	76.200 3.0000	23.812 0.9375	25.654 1.0100	19.050 0.7500	73000 16400	90500 20300	5100	6800	0.499 1.10
26878/ **26822**	38.100 1.5000	79.375 3.1250	23.812 0.9375	25.400 1.0000	19.050 0.7500	76500 17200	90500 20300	4800	6400	0.574 1.27
3490/ **3420**	38.100 1.5000	79.375 3.1250	29.370 1.1563	29.771 1.1721	23.812 0.9375	93000 20900	11400 25600	4900	6600	0.683 1.51
28150/ **28315**	38.100 1.5000	80.000 3.1496	21.006 0.8270	20.940 0.8244	15.875 0.6250	55500 12500	63000 14200	5000	6700	0.467 1.03
27880/ **27820**	38.100 1.5000	80.035 3.1510	24.608 0.9688	23.698 0.9330	18.512 0.7288	67000 15100	82500 18500	4800	6400	0.562 1.24
27881/ **27820**	38.100 1.5000	80.035 3.1510	24.608 0.9688	23.698 0.9330	18.512 07288	67000 15100	82500 18500	4800	6400	0.559 1.23
HM801346/ **HM801310**	38.100 1.5000	82.550 3.2500	29.370 1.1563	28.575 1.1250	23.020 0.9063	87000 19500	117000 26300	4700	6200	0.767 1.69
25572/ **25520**	38.100 1.5000	82.931 3.2650	23.812 0.9375	25.400 1.0000	19.050 0.7500	76000 17100	98000 22000	4500	6000	0.645 1.42
3875/ **3820**	38.100 1.5000	85.725 3.3750	30.162 1.1875	30.162 1.1875	23.812 0.9375	105000 23600	132000 29600	4500	6000	0.857 1.89
3876/ **3820**	38.100 1.5000	85.725 3.3750	30.162 1.1875	30.162 1.1875	23.812 0.9375	105000 23600	132000 29600	4500	6000	0.857 1.88
3580/ **3525**	38.100 1.5000	87.312 3.4375	30.162 1.1875	30.886 1.2160	23.816 0.9375	94000 21200	11700 26400	4400	5900	0.881 1.94
44150/ **44348**	38.100 1.5000	88.500 3.4843	25.400 1.0000	23.698 0.9330	17.462 0.6875	70500 15900	78000 17500	4000	5300	0.711 1.57
418/ **414**	38.100 1.5000	88.500 3.4843	29.988 1.0625	29.083 1.1450	22.225 0.8750	95500 21500	107000 24100	4600	6100	0.840 1.85
2789/ **2720**	39.688 1.5625	76.200 3.0000	23.812 0.9375	25.654 1.0100	19.050 0.7500	73000 16400	90500 20300	5100	6800	0.477 1.05
3382/ **3321**	39.688 1.5625	77.534 3.0525	29.370 1.1563	30.391 1.1965	23.812 0.9375	95000 21400	112000 25100	4800	6400	0.554 1.48
26880/ **26822**	39.688 1.5625	79.375 3.1250	23.812 0.9375	25.400 1.0000	19.050 0.7500	76500 17200	97500 21900	4800	6400	0.554 1.22
26881/ **26822**	93.688 1.5625	79.375 3.1250	23.812 0.9375	25.400 1.0000	19.050 0.7500	76500 17200	97500 21900	4800	6400	0.552 1.22
3382/ **3339**	39.688 1.5625	80.035 3.1510	29.370 1.1563	30.391 1.1965	23.812 0.9375	95000 21400	11200 25100	4800	6400	0.666 1.47
3382/ **3320**	39.688 1.5625	80.167 3.1562	29.370 1.1563	30.391 1.1965	23.812 0.9375	95000 21400	112000 25100	4800	6400	0.665 1.47
3382/ **3331**	39.688 1.5625	80.167 3.1562	29.370 1.1563	30.391 1.1965	23.812 0.9375	95000 21400	112000 25100	4800	6400	0.670 1.48

Single Row (Inch)
39.688~41.275mm
1.5625~1.6250inch

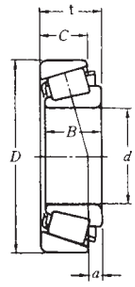

Tapered Roller Bearings

Bearing Number	Dimensions					Basic Load Ratings		Limiting Speeds		Weight
	mm inch					N lbf		rev/min		kg lb
	d	D	t	B	C	*Cr*	*Cor*	Grease	Oil	
3386/ 3320	39.688 1.5625	80.167 3.1562	29.370 1.1563	30.391 1.1965	23.812 0.9375	95000 21400	112000 25100	4800	6400	0.668 1.47
44158/ 44348	39.688 1.5625	88.500 3.4843	25.400 1.0000	23.698 0.9330	17.462 0.6875	70500 15900	78000 17500	4000	5300	0.691 1.52
28158/ 28300	40.000 1.5748	76.200 3.0000	20.638 0.8125	20.940 0.8244	15.507 0.6105	55500 12500	63000 14200	5000	6700	0.386 0.851
344/ 332	40.000 1.5748	80.000 3.1496	21.000 0.8268	22.403 0.8820	17.826 0.7018	68000 15300	75000 16900	4700	6300	0.479 1.06
344A/ 332	40.000 1.5748	80.000 3.1496	21.000 0.8268	22.403 0.8820	17.826 0.7018	68000 15300	75000 16900	4700	6300	0.482 1.06
350A/ 354A	40.000 1.5748	85.000 3.3465	20.638 0.8125	21.692 0.8540	17.462 0.6875	69500 15700	79500 17800	4400	5800	0.562 1.24
420/ 414	40.000 1.5748	88.500 3.4843	26.988 1.0625	29.083 1.1450	22.225 0.8750	95500 21500	107000 24100	4600	6100	0.813 1.79
543/ 532X	40.000 1.5748	107.950 4.2500	36.512 1.4375	36.957 1.4550	28.575 1.1250	141000 32000	177000 40000	3600	4800	1.77 3.90
HM801349/ HM801310	40.483 1.5748	82.550 3.2500	29.370 1.1563	28.575 1.1250	23.020 0.9063	87000 19500	117000 26300	4700	6200	0.731 1.61
LM300849/ LM300811	40.988 1.6137	67.975 2.6762	17.500 0.6890	18.000 0.7087	13.500 0.5315	46000 10300	62500 141000	5300	7000	0.239 1.527
18590/ 18520	41.275 1.6250	736.025 2.8750	16.667 0.6562	17.462 0.6875	12.700 0.5000	46000 10300	55500 12500	5000	6600	0.281 1.619
LM501349/ LM501310	41.275 1.6250	73.431 2.8910	19.558 0.7700	19.812 0.7800	14.732 0.5800	56000 12600	69500 15700	5000	6600	0.335 0.739
LM501349/ LM501314	41.275 1.6250	73.431 2.8910	21.430 0.8437	19.812 0.7800	16.604 0.6537	56000 12600	69500 15700	5000	6600	0.355 0.783
11162/ 11300	41.275 1.6250	76.200 3.0000	18.009 0.7090	17.384 0.6844	14.288 0.5625	42500 9550	51500 11600	4900	6500	0.337 0.743
24780/ 24720	41.275 1.6250	76.200 3.0000	22.225 0.8750	23.020 0.9063	17.462 0.6875	65000 14600	80500 18100	4900	6500	0.432 0.952
26882/ 26823	41.275 1.6250	76.200 3.0000	25.400 1.0000	25.400 1.000	20.638 0.8125	76500 17200	97500 21900	4800	6400	0.488 1.08
26882/ 26822	41.275 1.6250	79.375 3.1250	23.812 0.9375	25.400 1.0000	19.050 0.7500	76500 17200	97500 21900	4800	6400	0.531 1.17
26882/ 26822A	41.275 1.6250	79.375 3.1250	23.812 0.9375	25.400 1.0000	19.050 0.7500	76500 17200	97500 21900	4800	6400	0.528 1.16
26885/ 26822	41.275 1.6250	79.375 3.1250	23.812 0.9375	25.400 1.000	19.050 0.7500	76500 17200	97500 21900	4800	6400	0.535 1.18
11162/ 11315	41.275 1.6250	80.000 3.1496	18.009 0.7090	17.384 0.6844	14.288 0.5625	425000 9550	51500 11600	4900	6500	0.389 0.858
336/ 332	41.275 1.6250	80.000 3.1496	21.000 0.8268	22.403 0.8820	17.826 0.7018	68000 15300	75000 16900	4700	6300	0.468 1.03
342/ 332	41.275 1.6250	80.000 3.1496	21.000 0.8268	22.403 0.8820	17.826 0.7018	68000 15300	75000 16900	4700	6300	0.465 1.03
26882/ 26824	41.275 1.6250	80.000 3.1496	23.812 0.9375	25.400 1.0000	19.050 0.7500	76500 17200	97500 21900	4800	6400	0.542 1.20
26882/ 26820	41.275 1.6250	80.167 3.1562	25.400 1.0000	25.400 1.0000	20.638 0.8125	76500 17200	97500 21900	4800	6400	0.563 1.24
M802048/ M802011	41.275 1.6250	82.550 3.2500	26.543 1.0450	25.654 1.0100	20.193 0.7950	80500 18100	104000 23400	4600	6100	0.642 1.42
3880/ 3820	41.275 1.6250	85.725 3.3750	30.162 1.1875	30.162 1.1875	23.812 0.9375	105000 23600	132000 29600	4500	6000	0.810 1.79
3576/ 3525	41.275 1.6250	87.312 3.4375	30.162 1.1875	30.886 1.2160	23.812 0.9375	94000 21200	117000 26400	4400	5900	0.834 1.84
3577/ 3525	41.275 1.6250	87.312 3.4375	30.162 1.1875	30.886 1.2160	23.812 0.9375	94000 21200	117000 26400	4400	5900	0.831 1.83
3585/ 3525	41.275 1.6250	87.312 3.4375	30.162 1.1875	30.886 1.2160	23.812 0.9375	94000 21200	117000 26400	4400	5900	0.833 1.84
HM803145/ HM803110	41.275 1.6250	88.900 3.5000	30.162 1.1875	29.370 1.1563	23.020 0.9063	93500 21000	125000 28000	4300	5800	0.901 1.99
HM803146/ HM803110	41.275 1.6250	88.900 3.5000	30.162 1.1875	29.370 1.1563	23.020 0.9063	93500 21000	125000 28000	4300	5800	0.898 1.98
4388/ 4335	41.275 1.6250	90.488 3.5625	39.688 1.5625	40.386 1.5900	33.338 1.3125	136000 30500	175000 39500	4300	5800	1.25 2.76
M903345/ M903310	41.275 1.6250	92.075 3.6250	26.195 1.0313	23.812 0.9375	16.670 0.6536	72500 16300	81500 18300	3800	5000	0.758 1.67
46162/ 46368	41.275 1.6250	93.662 3.6875	31.750 1.2500	31.750 1.2500	26.195 1.0313	103000 23300	131000 29500	4100	5500	1.09 2.40
HM804840/ HM804810	41.275 1.6250	95.250 3.7500	30.162 1.1875	29.370 1.1563	23.020 0.9063	109000 24400	147000 33000	4000	5300	1.08 2.38

FBJ®

Tapered Roller Bearings

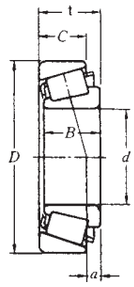

Single Row (Inch)
41.275~44.450mm
1.6250~1.7500inch

Bearing Number	Dimensions					Basic Load Ratings		Limiting Speeds		Weight
	mm inch					N lbf		rev/min		kg lb
	d	D	t	B	C	*Cr*	*Cor*	Grease	Oil	
53162/ **53375**	41.275 1.6250	95.250 3.7500	30.958 1.2188	28.300 1.142	20638 0.8125	82500 18500	92000 20600	3700	5000	0.975 2.15
HM903245/ **HM903210**	41.275 1.6250	95.250 3.7500	30.958 1.2188	28.575 1.1250	22.225 0.8750	96000 21600	116000 26100	3700	4900	1.05 2.32
4395/ **4335**	42.070 1.6563	94.488 3.5625	39.688 1.5625	40.386 1.5900	33.338 1.3125	136000 30500	175000 39500	4300	5800	1.24 2.73
22780/ **22720**	42.862 1.6875	82.550 3.2500	26.195 1.0313	26.988 1.0625	20.638 0.8125	75500 16900	97000 21800	4600	6100	0.617 1.36
25578/ **25520**	42.862 1.6875	82.931 3.2650	23.812 0.9375	25.400 1.0000	19050 0.7500	76000 17100	98000 22000	4500	6000	0.584 1.29
3579/ **3525**	42.862 1.6875	87.312 3.4375	30.162 1.1875	30.886 1.2160	23.812 0.9375	94000 21200	11700 26400	4400	5900	0.805 1.78
26884/ **26822**	42.875 1.6880	79.375 3.1250	23.812 0.9375	25.400 1.0000	19.050 0.7500	76500 17200	97500 21900	4800	6400	0.510 1.12
26886/ **26822**	42.875 1.6880	79.375 3.1250	23.812 0.9375	25.400 1.0000	19.050 0.7500	76500 17200	97500 21900	4800	6400	0.0513 1.13
25577/ **25520**	42.875 1.6880	82.931 3.2650	23.812 0.9375	25.400 1.0000	19.050 0.7500	76000 17100	98000 22000	4500	6000	0.581 1.28
12175/ **12303**	44.450 1.7500	76.992 3.0312	17.462 0.6875	17.145 0.6750	11.908 0.4688	44000 9850	54000 12200	4700	6300	0.308 0.679
18685/ **18620**	44.450 1.7500	79.375 3.1250	17.462 0.6875	17.462 0.6875	13.495 0.5313	45500 10200	56000 12600	4600	6200	0.345 0.761
25580/ **25520**	44.450 1.7500	82.931 3.2650	23.812 0.9375	25.400 1.0000	19.050 0.7500	76000 17100	98000 22000	4500	6000	0.560 1.24
25581/ **25520**	44.450 1.7500	82.931 3.2650	23.812 0.9375	25.400 1.0000	19.050 0.7500	76000 17100	98000 22000	4500	6000	0.563 1.24
25580/ **25520**	44.450 1.7500	92.931 3.2650	23.812 0.9375	25.400 1.0000	19.050 0.7500	76000 17100	98000 22000	4500	6000	0.556 1.23
3578/ **3520**	44.450 1.7500	84.138 3.3125	30.162 1.1875	30.886 1.2160	23.812 0.93785	94000 21200	117000 26400	4400	5900	0.699 1.54
355/ **354A**	44.450 1.7500	85.000 3.3465	20.638 0.8125	21.692 0.8540	17.462 0.6875	69500 15700	79500 17800	4400	5800	0.511 1.13
355A/ **354A**	44.450 1.7500	85.000 3.3465	20.638 0.8125	21.692 0.8540	17.462 0.6875	69500 15700	79500 17800	4400	5800	0.512 1.13
3578/ **3525**	44.450 1.7500	87.312 3.4375	30.162 1.1875	30.886 1.2160	23.812 0.9375	94000 21200	117000 26400	4400	5900	0.779 1.72
3578/ **3526**	44.450 1.7500	87.312 3.4375	30.162 1.1875	30.886 1.2160	23.812 0.9375	94000 21200	117000 26400	4400	5900	0.784 1.73
HM803149/ **HM803110**	44.450 1.75	88.900 3.5000	30.162 1.1875	29.370 1.1563	23.020 0.9063	93500 21000	125000 28000	4300	5800	0.849 1.87
3782/ **3720**	44.450 1.7500	93.264 3.6718	30.162 1.1875	30.302 1.1930	23.812 0.9375	102000 22900	134000 30000	4000	5300	0.961 2.12
46175 **46368**	44.450 1.7500	93.662 3.6875	31.750 1.2500	31.750 1.2500	26.195 1.0313	103000 23300	131000 29500	4100	5500	1.04 2.29
46176/ **46368**	44.450 1.7500	93.662 3.6875	31.750 1.2500	31.750 1.2500	26.195 1.0313	103000 23300	131000 29500	4100	5500	1.03 2.27
33885/ **33821**	44.450 1.7500	95.250 3.7500	27.783 1.0938	28.575 1.1250	22.225 0.8750	107000 24100	139000 3100	3900	5200	0.987 2.18
438/ **432**	44.450 1.7500	95.250 3.7500	27.783 1.0938	29.900 1.1772	22.225 0.8750	108000 24300	129000 29100	4200	5600	0.953 2.10
438/ **432A**	44.450 1.7500	95.250 3.7500	27.783 1.0938	29.900 1.1772	22.225 0.8750	108000 24300	129000 29100	4200	5600	0.956 2.11
HM804842/ **HM804810**	44.450 1.7500	95.250 3.7500	30.162 1.1875	29.370 1.1563	23.020 0.9063	109000 24400	147000 33000	4000	5300	1.04 2.29
53176 **53375**	44.450 1.7500	95.250 3.7500	30.958 1.2188	28.300 1.1142	20.638 0.8125	82500 18500	92000 20600	3700	5000	0.928 2.05
53176/ **53377**	44.450 1.7500	95.250 3.7500	30.958 1.2188	28.300 1.1142	20638 0.8125	82500 18500	92000 20600	3700	5000	0.924 2.04
53177/ **53375**	44.450 1.7500	95.250 3.7500	30.958 1.2188	28.300 1.1142	20.638 0.8125	82500 18500	92000 20600	3700	5000	0.925 2.04
53178/ **53375**	44.450 1.7500	95.250 3.7500	30.958 1.2188	28.300 1.1142	20.638 0.8125	82500 18500	9200 20600	3700	5000	0.927 2.04
HM903249A/ **HM903210**	44.450 1.7500	95.250 3.7500	30.958 1.2188	28.300 1.1142	22.225 0.8750	96000 21600	116000 21600	3700	4900	0.999 2.20
527/ **522**	44.450 1.7500	101.600 4.0000	34.925 1.3750	36.068 1.4200	26.988 1.0625	135000 30500	165000 37000	3800	5000	1.37 3.02
460/ **453X**	44.450 1.7500	104.775 4.1250	30.162 1.1875	29.317 1.1542	24.605 09687	115000 25800	148000 33000	3500	4700	1.2-9 2.84

Single Row (Inch)
44.450~47.625mm
1.7500~1.8750inch

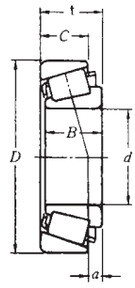

Tapered Roller Bearings

Bearing Number	Dimensions					Basic Load Ratings		Limiting Speeds		Weight
	mm inch					N lbf		rev/min		kg lb
	d	D	t	B	C	*Cr*	*Cor*	Grease	Oil	
45280/ 45220	44.450 1.7500	104.75 4.1250	30.162 1.1875	30.958 1.2188	23.812 0.9375	130000 29200	169000 38000	3500	4700	1.35 2.98\
HM807040/ HM807010	44.450 1.7500	104.775 4.1250	36.512 1.4375	36.512 1.4375	28.575 1.1250	138000 31000	189000 42500	3600	4800	1.62 3.57
55175C/ 55437	44.450 1.7500	111.125 4.3750	30.162 1.1875	26.909 1.0594	20.638 0.8125	104000 23400	136000 30500	3200	4200	1.45 3.20
55176C/ 55437	44.450 1.7500	111.125 4.3750	30.162 1.1875	26.909 1.0594	20.638 0.8125	104000 23400	136000 30500	3200	4200	1.09 2.40
6277/ 6220	44.450 1.7500	127.000 5.0000	50.800 2.0000	52.388 2.0625	41.275 1.6250	250000 56000	320000 72500	3200	4300	3.58 7.89
25584/ 25520	44.983 1.7710	82.931 3.2650	23.812 0.9375	25.400 1.0000	19.050 0.7500	76000 17100	98000 22000	4500	6000	0.555 1.22
3776/ 3720	44.983 1.7710	93.264 3.6718	30.162 1.1875	30.302 1.1930	23.812 0.9375	102000 22900	134000 30000	4000	5300	0.952 2.10
358/ 354A	45.000 1.7717	85.000 3.3465	20.638 0.8125	21.692 0.8540	17.462 0.6875	69500 15700	79500 17800	4400	5800	0.505 1.11
367/ 362A	45.000 1.7717	88.900 3.50000	20.638 0.8125	22.225 0.8750	16.513 0.6501	76500 17200	90500 20400	4100	5500	0.595 1.31
3586/ 3525	45.237 1.7810	87.312 3.4375	30.162 1.1875	30.886 1.2160	23.812 0.9375	94000 21200	11700 26400	4400	5900	0.765 1.69
LM102949/ LM102910	45.242 1.7812	73.431 2.8910	19.558 0.7700	19.812 0.7800	15.748 0.6200	54000 12200	76000 17100	4800	6400	0.307 0.667
LM603049/ LM603011	45.242 1.7812	77.788 3.0625	19.842 0.7812	19.842 0.7812	15.080 0.5937	57500 12900	73500 16600	4600	6200	0.372 0.820
LM603049/ LM603012	45.242 1.7812	77.788 3.0625	21.430 0.8437	19.842 0.7812	16.667 06562	57500 12900	73500 16600	4600	6200	0.391 0.862
LM603049/ LM603014	45.242 1.7812	79.974 3.1486	19.842 0.7812	19.842 0.7812	15.080 0.5937	57500 12900	73500 16600	4600	6200	0.405 0.893
25590/ 25519	45.618 1.7960	82.550 3.2500	23.812 0.9375	25.400 1.0000	19.050 0.7500	76000 17100	98000 22000	4500	6000	0.534 1.18
25590/ 25520	46.618 1.7960	82.931 3.2650	23.812 0.9375	25.400 1.0000	19.050 0.7500	76000 17100	98000 22000	4500	6000	0.543 1.20
25590/ 25523	45.618 1.7960	82.931 3.2650	26.988 1.0625	25.400 1.0000	22.225 0.8750	76000 17100	98000 22000	4500	6000	0.588 1.30
25590/ 25521	45.618 1.7960	83.058 3.2700	23.812 0.9375	25.400 1.0000	19.050 0.7500	76000 17100	9800 22000	4500	6000	0.541 1.19
25590/ 25522	45.618 1.7960	83.058 3.2700	23.876 0.9400	25.400 1.0000	19.114 0.7525	76000 17100	98000 22000	4500	6000	0.545 1.20
25590/ 25526	45.618 1.7960	85.000 3.3465	23.812 0.9375	25.400 1.0000	19.050 0.7500	76000 17100	98000 22000	4500	6000	0.581 1.28
LM503349A/ LM503310	45.987 1.8105	74.976 2.9518	18.000 0.7087	18.000 0.8087	14.000 0.5512	51000 11500	71000 16000	4700	6300	0.296 0.653
18690/ 18620	46.038 1.8125	79.375 3.1250	17.462 0.6875	17.462 0.6875	13.495 0.5313	45500 10200	56000 12600	4600	6200	0.329 0.725
25592/ 25520	46.038 1.8125	82.931 3.2650	23.812 0.9375	25.400 1.0000	19.050 0.7500	76000 17100	98000 22000	4500	6000	0.538 1.19
359A/ 354A	46.038 1.8125	85.000 3.3465	20.638 0.8125	21.692 0.8540	17.462 0.6875	69500 15700	79500 17800	4400	5800	0.489 1.08
359S/ 354A	46.038 1.8125	85.000 3.3465	20.638 0.8125	21.692 0.8540	17.462 0.6875	69500 15700	79500 17800	4400	5800	0.491 1.08
2984/ 2924	46.038 1.8125	85.000 3.3465	25.400 1.0000	25.608 1.0082	20.638 0.8125	79000 17700	104000 23400	4400	5800	0.615 1.36
359S/ 352	46.038 1.8125	90.119 3.5480	23.000 0.9055	21.692 0.8540	21.808 0.8586	69500 15700	79500 17800	4400	5800	0.651 1.44
3777/ 3720	46.038 1.8125	93.264 3.6718	30.162 1.1875	30.302 1.1930	23.812 0.9063	102000 22900	134000 3000	4000	5300	0.934 2.06
436/ 432	46.038 1.8125	95.250 3.7500	27.783 1.0938	29.900 1.1772	22.225 0.8750	108000 24300	129000 29100	4200	5600	0.927 2.04
369A/ 362A	47.625 1.8750	88.900 3.5000	20.638 0.8125	22.225 0.8750	16.513 0.6501	76500 17200	90500 20400	4100	5500	0.559 1.23
369S/ 362A	47.625 1.8750	88.900 3.5000	20.638 0.8125	22.225 0.8750	16.513 0.6501	76500 17200	90500 20400	4100	5500	0.561 1.24
M804048/ M804010	47.625 1.8750	88.900 3.5000	25.400 1.0000	25.400 1.0000	19.050 0.7500	82000 18500	101000 22800	4200	5600	0.662 1.46
M804049/ M804010	47.625 1.8750	88.900 3.5000	25.400 1.0000	25.400 1.0000	19.050 0.7500	82000 18500	101000 22800	4200	5600	0.657 1.45
3778/ 3720	47.625 1.8750	93.264 3.6718	30.162 1.1875	30.302 1.1930	23.812 0.9375	102000 22900	134000 30000	4000	5300	0.898 1.98

FBJ®

Tapered Roller Bearings

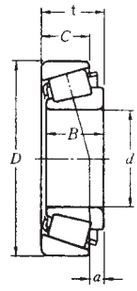

Single Row (Inch)
47.625~50.800mm
1.8750~2.0000inch

Ball / Roller Bearing

Bearing Number	Dimensions					Basic Load Ratings		Limiting Speeds		Weight
	mm inch					N lbf		rev/min		kg lb
	d	D	t	B	C	*Cr*	*Cor*	Grease	Oil	
3779/ 3720	47.625 1.8750	93.264 3.6718	30.162 1.1875	30.302 1.1930	23.812 0.9375	102000 22900	134000 30000	4000	5300	0.906 2.00
HM804846/ HM804810	47.625 1.8750	95.250 3.7500	30.162 1.1875	29.370 1.1563	23.020 0.9063	109000 24400	147000 33000	4000	5300	0.978 2.16
386A/ 382A	47.625 1.8750	96.838 3.8125	21.000 0.8268	21.946 0.8640	15.875 0.6250	78000 17600	96500 21700	3700	5000	0.720 1.59
528/ 522	47.625 1.8750	101.600 4.0000	34.925 1.3750	36.068 1.4200	26.988 1.0625	135000 30500	165000 37000	3800	5000	1.30 2.87
463/ 463X	47.625 1.8750	104.775 4.1250	30.162 1.1875	29.317 1.1542	24.605 0.9687	115000 25800	148000 33000	3500	4700	1.24 2.73
467/ 453X	47.625 1.8750	104.775 4.1250	30.162 1.1875	29.317 1.1542	24.605 0.9687	115000 25800	148000 33000	3500	4700	1.24 2.73
45282/ 45220	47.625 1.8750	104.775 4.1250	30.162 1.1875	30.958 1.2188	23.812 0.9375	130000 29200	169000 38000	3500	4700	1.29 2.84
55187C/ 55437	47.625 1.8750	111.125 4.3750	30.162 1.1875	26.909 1.0594	20.638 0.8125	104000 23400	136000 30500	3200	4200	1.40 3.09
72188C/ 72487	47.625 1.8750	123.825 4.8750	36.512 1.4375	32.791 1.2910	25.400 1.0000	154000 345000	188000 42500	2900	3900	2.16 4.76
HM804848/ HM804810	48.412 1.9060	95.250 3.7500	30.162 1.1875	29.370 1.1563	23.020 0.9063	109000 24400	147000 33000	4000	5300	0.967 2.13
HM804849/ HM804810	48.412 1.9060	95.250 3.7500	30.162 1.1875	29.370 1.1563	23.020 0.9063	109000 24400	147000 33000	4000	5300	0.964 2.13
3781/ 3720	49.212 1.9375	93.264 3.6718	30.162 1.1875	30.302 1.1930	23.812 0.9375	102000 22900	134000 30000	4000	5300	0.877 1.93
5395/ 5335	49.212 1.9375	103.188 4.0625	43.658 1.7188	44.475 1.7510	36.512 1.4375	174000 39000	232000 52000	3800	5000	1.75 3.86
HM807044/ HM807010	49.212 1.9375	104.775 4.1250	36.512 1.4375	36.512 1.4375	28.575 1.1250	138000 31000	189000 42500	3600	4800	1.52 3.35
65390/ 65320	49.212 1.9375	114.300 4.5000	44.450 1.7500	44.450 1.7500	34.925 1.3750	186000 42000	225000 50500	3600	4800	2.23 4.92
HH506348/ HH506310	49.212 1.9375	114.300 4.5000	44.450 1.7500	44.450 1.7500	36.068 1.4200	203000 45500	261000 58500	3500	4700	2.33 5.14
LM104947+/ LM104911	49.987 1.9680	82.550 3.2500	21.590 0.8500	22.225 0.8750	16.510 0.6500	69500 15700	94500 21200	4300	5700	0.434 0.957
28579+/ 28520	49.987 1.9680	89.980 3.5425	24.750 0.9744	25.400 1.0000	19.987 0.7869	83500 18800	116000 26100	4000	5300	0.670 1.48
28579+/ 28521	49.987 1.9680	92.075 3.6250	24.608 0.9688	25.400 1.0000	19.845 0.7813	83500 18800	116000 26100	4000	5300	0.718 1.58
HH506349+/ HH506310	49.987 1.9680	114.300 4.5000	44.450 1.7500	44.450 1.7500	36.068 1.4200	203000 45500	26100 58500	3500	4700	2.27 5.00
JLM104948/ JLM104910	50.00 1.9685	82.000 3.2283	21.500 0.8465	21.500 0.8465	17.000 0.6693	69500 15700	94000 21100	4300	5700	0.420 0.926
JLM104949/ JLM704910	50.000 1.9685	84.000 3.3071	22.000 0.8661	22.000 0.8661	17.500 0.6890	69500 15700	94000 21100	4300	5700	0.466 1.03
365/ 362A	50.000 1.9685	88.900 3.5000	20.638 0.8125	22.225 0.8750	16.513 0.6501	76500 17200	90500 20400	4100	5500	0.530 1.17
366/ 362A	50.000 1.9685	88.900 3.5000	20.638 0.8125	22.225 0.8750	16.513 0.6501	76500 17200	90500 20400	4100	5500	0.529 1.17
JM205149/ JM205110	50.000 1.9685	90.000 3.5433	28.000 1.1024	28.000 1.1024	23.000 0.9055	106000 23900	141000 31500	4100	5400	0.752 1.66
JM205149A/ JM205110	50.000 1.9685	90.0000 3.5433	28.000 1.1024	28.000 1.1027	23.000 0.9055	106000 23900	141000 31500	4100	5400	0.747 1.65
JHM807045/ JHM807012	50.000 1.9685	105.000 4.13339	37.000 1.4567	36000 1.4173	29.000 1.1417	138000 31000	189000 42500	3600	4800	1.52 3.35
396/ 394A	50.000 1.9685	110.000 4.3307	22.000 0.8661	21.996 0.8660	18.824 0.7411	89500 20100	120000 27000	3200	4300	1.06 2.34
LM104949/ LM104911	50.800 2.0000	82.550 3.2500	21.590 0.8500	22.225 0.8750	16.510 0.6500	69500 15700	94000 21100	4300	5700	0.419 0.924
LM104949/ LM104912	50.800 2.0000	82.931 3.2650	21.590 0.8500	22.225 0.8750	16.510 0.6500	69500 15700	94000 21100	4300	5700	0.425 0.937
18790/ 18720	50.800 2.0000	85.000 3.3465	17.462 0.6875	17.462 0.6875	13.495 0.5313	49500 11100	65000 14600	4200	5600	0.374 0.825
18790/ 18724	50.800 2.0000	88.900 3.5000	17.462 0.6875	17.462 0.6875	13.495 0.5313	49500 11100	65000 14600	4200	5600	0.431 0.950
3689 362A	50.800 2.0000	88.900 3.5000	20.638 0.8125	22.225 0.8750	16.513 0.6501	76500 17200	90500 20.400	4100	5500	0.519 1.14
368A/ 362A	50.800 2.0000	88.900 3.5000	20.638 0.8125	22.225 0.8750	16.513 0.6501	76500 17200	90500 20400	4100	5500	0.516 1.14
370A/ 362A	50.800 2.0000	88.900 3.5000	20.638 0.8125	22.225 0.8750	16.513 0.6501	76500 17200	90500 20400	4100	5500	0.511 1.13

Single Row (Inch)
50.800~52.388mm
2.0000~2.0625inch

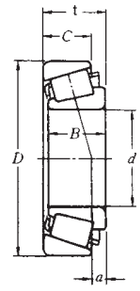

Tapered Roller Bearings

Bearing Number	Dimensions					Basic Load Ratings		Limiting Speeds		Weight
	mm inch					N lbf		rev/min		kg lb
	d	D	t	B	C	*Cr*	*Cor*	Grease	Oil	
368A/ 362	50.800 2.0000	90.000 3.5433	20.000 0.7874	22.225 0.8750	15.875 0.6250	76500 17200	90500 20400	4100	5500	0.525 1.16
368A/ 363	50.800 2.0000	90.000 3.5433	20.000 0.7874	22.225 0.8750	20.000 0.7874	76500 17200	90500 20400	4100	5500	0.556 1.23
28580/ 28521	50.800 2.0000	92.075 3.6250	24.608 0.9688	25.400 1.0000	19.845 0.7813	83500 18800	116000 26100	4000	5300	0.703 1.55
3775/ 3720	50.800 2.0000	93.264 3.6718	30.162 1.1875	30.302 1.1930	23.812 0.9375	102000 22900	134000 30000	4000	5300	0.852 1.88
3780/ 3720	50.800 2.0000	93.264 3.6718	30.162 1.1875	30.302 1.1930	23.812 0.9375	102000 22900	134000 30000	4000	5300	0.848 1.87
3780/ 3730	50.800 2.0000	93.264 3.6718	30.162 1.1875	30.302 1.1930	23.812 0.9375	102000 22900	134000 30000	4000	5300	0.854 1.88
3784/ 3720	50.800 2.0000	93.264 3.6718	30.162 1.1875	30.302 1.1930	23.812 0.9375	102000 22900	134000 30000	4000	5300	0.839 1.85
33889/ 33821	50.800 2.0000	95.250 3.7500	27.783 1.0938	28.575 1.1250	22.225 0.8750	107000 24100	139000 31000	3900	5200	0.876 1.93
3780/ 3726	50.800 2.0000	95.250 3.7500	30.162 1.1875	30.302 1.1930	23.812 0.9375	102000 22900	134000 30000	4000	5300	0.903 1.99
385A/ 382A	50.800 2.0000	96.838 3.8125	21.000 0.8268	21.946 0.8640	15.875 0.6250	78000 17600	96500 21700	3700	5000	0.676 1.49
28678/ 28622	50.800 2.0000	97.630 3.8437	24.608 0.9688	24.608 0.9688	19.446 0.7656	88500 19900	128000 28700	3700	4900	0.852 1.88
3780/ 3732	50.800 2.0000	98.425 3.8750	30.162 1.1875	30.302 1.1930	23.812 0.9375	102000 22900	134000 30000	4000	5300	0.993 2.19
49585/ 49520	50.800 2.0000	101.600 4.0000	31.750 1.2500	31.750 1.2500	25.400 1.0000	110000 24800	136000 30500	3700	5000	1.13 2.49
529/ 522	50.800 2.0000	101.600 4.0000	34.925 1.3750	36.068 1.4200	26.988 1.0625	135000 30500	165000 37000	3800	5000	1.24 2.73
529X 522	50.800 2.0000	101.600 4.0000	34.925 1.3750	36.068 1.4200	26.988 1.0625	135000 30500	165000 37000	3800	5000	1.23 2.71
455/ 453X	50.800 2.0000	104.775 4.1250	30.162 1.1875	29.317 1.1542	24.605 0.9687	115000 25800	148000 33000	3500	4700	1.19 2.62
455S/ 453X	50.800 2.0000	104.775 4.1250	30.162 1.1875	29.317 1.1542	24.605 0.9687	115000 25800	148000 33000	3500	4700	1.18 2.60
45284/ 45220	50.800 2.0000	104.775 4.1250	30.162 1.1875	30.958 1.2188	23.812 0.9375	130000 29200	169000 38000	3500	4700	1.22 2.69
45285/ 45220	50.0800 2.0000	104.775 4.1250	30.162 1.1875	30.958 1.2188	23.812 0.9375	130000 29200	169000 38000	3500	4700	1.23 2.71
45285A/ 45220	50.800 2.0000	104.775 4.1250	30.162 1.1875	30.958 1.2188	23.812 0.9375	130000 29200	169000 38000	3500	4700	1.23 2.71
HM807046/ HM807010	50.800 2.0000	104.775 4.1250	36.512 1.4375	36.512 1.4375	28.575 1.1250	138000 31000	189000 42500	3600	4800	1.49 3.29
59200/ 59412	50.800 2.0000	104.775 4.1250	36.512 1.4375	36.512 1.4375	28.575 1.1250	143000 32000	178000 4000	3700	4900	1.44 3.18
537/ 532X	50.800 2.0000	107.950 4.2500	36.512 1.4375	36.957 1.4550	28.575 1.1250	141000 32000	177000 4000	3600	4800	1.55 3.42
HM907643/ HM907614	50.800 2.0000	111.125 4.3750	30.162 1.1875	28.575 1.1250	20.638 0.8125	104000 23400	136000 30500	3200	4200	1.36 3.00
55200C/ 55443	50.800 2.0000	112.712 4.4375	30.162 1.1875	26.909 1.0594	20.638 0.8125	104000 23400	136000 30500	3200	4200	1.34 2.95
3975/ 3920	50.800 2.0000	112.712 4.4375	30.162 1.1875	30.048 1.1830	23.812 0.9375	119000 26800	174000 390000	3200	4300	1.53 3.37
39573/ 39520	50.800 2.0000	112.712 4.4375	30.162 1.1875	30.162 1.1875	23.812 0.9375	138000 31000	195000 43500	3200	4200	1.55 3.42
39575/ 39520	50.800 2.000	112.712 4.4375	30.162 1.1875	30.162 1.1875	23.812 0.9375	138000 31000	195000 43500	3200	4200	1.54 3.40
66200/ 66462	50.800 2.0000	117.475 4.6250	33.338 1.3125	31.750 1.2500	23.812 0.9375	130000 29100	153000 345000	3300	4400	1.67 3.68
619/ 612	50.800 2.0000	120.650 4.7500	41.275 1.6250	41.275 1.6250	31.750 1.2500	172000 38500	21300 4800	3300	4400	2.30 5.07
72200C/ 72487	50.800 2.0000	123.825 4.8750	36.512 1.4375	32.791 1.2910	25.400 1.0000	154000 34500	18800 42500	2900	3900	2.10 4.63
72201C/ 72487	50.800 2.0000	123.825 4.8750	36.512 1.4375	32.791 1.2910	25.400 1.0000	154000 34500	18800 42500	2900	3900	2.10 4.63
555/ 552A	50.800 2.0000	123.825 4.8750	38.100 1.500	36.678 1.4440	30.162 1.1875	158000 35500	216000 48500	3000	4100	2.34 5.16
368S/ 362A	51.592 2.0312	88.900 3.5000	20.638 0.8125	22.225 0.8750	16.513 0.6501	76500 17200	90500 20400	4100	5500	0.507 1.12
28584/ 28521	52.388 2.0625	92.075 3.6250	24.608 0.9688	25.400 1.0000	19.845 0.7813	83500 18800	116000 26100	4000	5300	0.677 1.49
3767/ 3720	52.388 2.0625	93.264 3.6718	30.162 1.1875	30.302 1.1930	23.812 0.9375	102000 22900	134000 3000	4000	5300	0.819 1.81

FBJ®

Tapered Roller Bearings

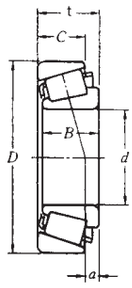

Single Row (Inch)
52.388~57.150mm
2.0625~2.2500inch

Bearing Number	Dimensions					Basic Load Ratings		Limiting Speeds		Weight
	mm inch					N lbf		rev/min		kg lb
	d	D	t	B	C	*Cr*	*Cor*	Grease	Oil	
33890/ 33821	52.388 2.0625	95.250 3.7500	27.783 1.0938	28.575 1.1250	22.225 0.8750	107000 24100	139000 31000	3900	5200	0.851 1.88
33891/ 33821	52.388 2.0625	95.250 3.7500	27.783 1.0938	28.575 1.1250	22.225 0.8750	107000 24100	139000 31000	3900	5200	0.847 1.87
LM806649/ LM806610	53.975 2.1250	88.900 3.5000	19.050 0.7500	19.050 0.7500	13.492 0.5312	61000 13700	82500 18600	4000	5300	0.437 0.963
33895/ 33821	53.975 2.1250	95.250 3.7500	27.783 1.1938	28.575 1.1250	22.225 0.8750	107000 24100	139000 31000	3900	5200	0.821 1.81
33895/ 33822	53.975 2.1250	95.250 3.7500	27.783 1.0938	28.575 1.1250	22.225 0.8750	107000 24100	139000 31000	3900	5200	0.824 1.82
389A/ 382A	53.975 2.1250	96.838 3.8125	21.000 0.8268	121.946 0.8640	15.875 0.6250	78000 17600	96500 21700	3700	5000	0.633 1.40
45287/ 45220	53.975 2.1250	104.775 4.1250	30.162 1.1875	30.958 1.2188	23.812 0.9375	130000 29200	169000 38000	3500	4700	1.17 2.58
HM807049/ HM807010	53.975 2.1250	104.775 4.1250	36.512 1.4375	36.512 1.4375	28.575 1.1250	138000 31000	189000 42500	3600	4800	1.41 3.11
539/ 532X	53.975 2.1250	107.950 4.2500	36.512 1.4375	36.957 1.4550	28.575 1.1250	141000 32000	177000 4000	3600	4800	1.47 3.24
539A/ 532X	53.975 2.1250	107.950 4.2500	36.512 1.4375	36.957 1.4550	28.575 1.1250	141000 32000	177000 40000	3600	4800	1.47 3.24
539/ 532A	53.975 2.1250	111.125 4.3750	38.100 1.5000	36.957 1.4550	30.162 1.1875	141000 32000	177000 40000	3600	4800	1.65 3.64
621/ 612	53.975 2.1250	120.650 4.7500	41.275 1.6250	41.275 1.6250	31.750 1.250	172000 38500	213000 48000	3300	4400	2.21 4.87
66584/ 66520	53.975 2.1250	122.238 4.8125	33.338 1.3125	31.750 1.2500	23.812 0.9375	134000 30000	163000 36500	3100	4200	1.79 3.95
5578/ 5535	53.975 2.1250	122.238 4.8125	43.658 1.7188	43.764 1.7230	36.51 1.4375	194000 43500	283000 63500	3100	4100	2.64 5.82
72212C/ 72487	53.975 2.1250	123.825 4.8750	36.512 1.4375	32.791 1.2910	25.400 1.0000	154000 34500	188000 42500	2900	3900	2.03 4.48
557S/ 552A	533975 2.1250	123.825 4.8750	38.100 1.5000	36.678 1.4440	30.162 1.1875	158000 35500	216000 48500	3000	4100	2.26 4.98
HM911242/ HM911210	53.975 2.1250	130.175 5.1250	36.512 1.4375	33.338 1.3125	23.812 0.9375	156000 35000	186000 42000	2700	3600	2.27 5.00
78214C/ 788551	53.975 2.1250	140.030 5.5130	36.512 1.4375	33.236 1.3085	23.520 0.9260	171000 38500	212000 47500	2600	3400	2.77 6.11
78215C/ 78551	53.975 2.1250	140.030 5.5130	36.512 1.4375	33.236 1.3085	23.520 0.9260	171000 38500	212000 47500	2600	3400	2.76 6.09
HM807048/ HM807010	54.488 2.1452	140.775 4.1250	36.512 1.4375	36.512 1.4375	28.575 1.1250	138000 31000	189000 42500	3600	4800	1.40 3.09
JLM506849/ JLM506810	55.000 2.1654	90.000 3.5433	23.000 0.9055	23.000 0.9055	18.500 0.7283	77500 17400	109000 24400	3900	5300	0.558 1.23
JM207049/ JM207010	55.000 2.1654	95.000 3.7402	29.000 1.1417	29.000 1.1417	23.500 0.9252	107000 24000	144000 32500	3800	5100	0.820 1.81
385/ 382A/	55.000 2.1654	96.838 3.8125	21.000 0.8268	21.946 0.8640	15.875 0.6250	78000 17600	96500 21700	3700	5000	0.616 1.36
385X/ 382A	55.000 2.1654	96.838 3.8125	21.000 0.8268	21.946 0.8640	15.875 0.6250	78000 17600	96500 21700	3700	5000	0.614 1.35
JH307749/ JH307710	55.000 2.1654	110.000 4.3307	39.000 1.5354	39.000 1.5354	32.000 1.2598	173000 39000	219000 49500	3500	4600	1.71 3.77
28680/ 28622	55.562 2.1875	97.630 3.8437	24.608 0.9688	24.608 0.9688	19.446 0.7656	88500 19900	128000 28700	3700	4900	0.774 1.71
72218C/ 72487	55.562 2.1875	123.825 4.8750	36.512 1.4375	32.791 1.2910	25.400 1.0000	154000 34500	188000 42500	2900	3900	1.99 4.39
HM813840/ HM813810	55.562 2.1875	127.000 5.0000	36.512 1.4375	36.512 1.4375	26.988 1.0625	163000 36500	22800 51500	2900	3800	2.34 5.16
389/ 382A	55.575 2.1880	96.838 3.8125	21.000 0.8268	21.946 0.8640	15.875 0.6250	78000 17600	96500 21700	3700	5000	0.608 1.34
387/ 382A	57.150 2.2500	96.838 3.8125	21.000 0.8268	21.946 0.8640	15.875 0.6250	78000 17600	96500 21700	3700	5000	0.583 1.29
387A/ 382A	57.150 2.2500	96.838 3.8125	21.000 0.8268	21.946 0.8640	15.875 0.6250	78000 17600	96500 21700	3700	5000	0.581 1.28
387AS/ 382A	57.150 2.2500	96.838 3.8125	21.000 0.8268	21.946 0.8640	15.875 0.6250	78000 17600	96500 21700	3700	5000	0.576 1.27
387S/ 382A	57.150 2.2500	96.838 3.8125	21.000 0.8268	21.946 0.8640	15.875 0.6250	78000 17600	96500 21700	3700	5000	0.585 1.29
387A/ 382S	57.150 2.2500	96.838 3.8125	25.400 1.0000	21.946 0.8640	20.274 0.7982	78000 17600	96500 21700	3700	5000	0.650 1.43

Single Row (Inch)
57.150~60.325mm
2.2500~2.3750inch

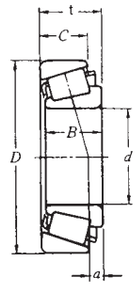

Tapered Roller Bearings

Bearing Number	Dimensions					Basic Load Ratings		Limiting Speeds		Weight
	mm inch					N lbf		rev/min		kg lb
	d	D	t	B	C	*Cr*	*Cor*	Grease	Oil	
28682/ **28622**	57.150 2.2500	97.630 3.8437	24.608 0.9688	24.608 0.9688	19.446 0.7656	885000 19900	128000 28700	3700	4900	0.747 1.65
387A/ **382**	57.150 2.2500	98.425 3.8750	21.000 0.8268	21.946 0.8640	17.826 0.7018	78000 17600	96500 21700	3700	5000	0.628 1.38
387A/ **383A**	57.150 2.2500	100.000 3.9370	21.000 0.8268	21.946 0.8640	17.826 0.7018	78000 17600	96500 21700	3700	5000	0.660 1.46
462/ **453X**	57.150 2.2500	104.775 4.1250	30.162 1.1875	29.317 1.1542	24.605 0.9687	115000 25800	148000 33000	3500	4700	1.06 2.34
469/ **453X**	57.150 2.2500	104.775 4.1250	30.162 1.1875	29.317 1.1542	24.605 0.9687	115000 25800	148000 33000	3500	4700	1.06 2.34
45289/ **45220**	57.150 2.2500	104.775 4.1250	30.162 1.1875	30.958 1.2188	23.812 0.9375	130000 29200	169000 38000	3500	4700	1.10 2.43
45290/ **45220**	57.150 2.2500	104.775 4.1250	30.162 1.18754	30.958 1.2188	23.812 0.9375	130000 29200	169000 38000	3500	4700	1.10 2.43
45291/ **45220**	57.150 2.2500	104.775 4.1250	30.162 1.1875	30.958 1.2188	23.812 0.9375	13000 29200	169000 38000	3500	4700	1.09 2.40
469/ **453A**	57.150 2.2500	107.950 4.2500	27.783 1.0938	29.317 1.1542	22.225 0.8750	115000 25800	148000 33000	3500	4700	1.11 2.45
390/ **394A**	57.150 2.2500	110.000 4.3307	22.000 0.8661	21.946 0.8640	18.824 0.7411	89500 20100	120000 27000	3200	4300	0.954 2.10
469/ **454**	57.150 2.2500	110.000 4.3307	27.795 1.0943	29.317 1.1542	27.000 1.0630	115000 25800	148000 33000	3500	4700	1.24 2.73
3979/ **3920**	57.150 2.2500	112.712 4.4375	30.162 1.1875	30.048 1.1830	23.812 0.9375	119000 26800	174000 39000	3200	4300	1.40 3.09
39580/ **39520**	57.150 2.2500	112.712 4.4375	30.162 1.1875	30.162 1.1875	23.812 0.9375	138000 31000	195000 43500	3200	4200	1.41 3.11
39581/ **39520**	57.150 2.2500	112.712 4.4375	30.162 1.1875	30.162 1.1875	23.812 0.9375	138000 31000	195000 43500	3200	4200	1.40 3.09
33225/ **33462**	57.150 2.2500	117.475 4.6250	30.162 1.1875	30.162 1.1875	23.812 0.9375	117000 26200	175000 39500	3000	4000	1.58 3.48
66225/ **66462**	57.150 2.2500	117.475 4.6250	33.338 1.3125	31.750 1.2500	23.812 0.9375	130000 29100	153000 34500	3300	4400	1.54 3.40
623/ **612**	57.150 2.2500	120.650 4.7500	41.275 1.6250	41.275 1.6250	31.750 1.2500	172000 38500	213000 48000	3300	4400	2.12 4.67
72225C/ **72487**	57.150 2.2500	123.825 4.8750	36.512 1.4375	32.791 1.291	25.400 1.0000	154000 34500	188000 42500	2900	3900	1.96 4.32
555S/ **552A**	57.150 2.2500	123.825 4.8750	38.100 1.5000	36.678 1.4440	30.162 1.1875	158000 35500	216000 48500	3000	4100	2.18 4.81
78225/ **78551**	57.150 2.2500	104.030 5.5130	36.512 1.4375	33.236 1.3085	23.520 0.9260	171000 38500	212000 47500	2600	3400	2.69 5.93
388A/ **382A**	57.531 2.2650	96.838 3.8125	21.000 0.8268	21.946 0.8640	15.875 0.6250	78000 17600	96500 21700	3700	5000	0.575 1.27
66589/ **66520**	59.972 2.3611	122.238 4.8125	33.338 1.3125	31.750 1.2500	23.812 0.9375	134000 30000	163000 36500	3100	4200	1.66 3.66
H913840/ **H913810**	59.987 2.3617	146.050 5.7500	41.275 1.6250	39.688 1.5625	25.400 1.0000	199000 744500	234000 52500	2400	3200	3.22 7.10
JLM508748/ **JLM508710**	60.000 2.3622	95.000 3.7402	24.000 0.9449	24.000 0.9449	19.000 0.7480	83000 18700	122000 27300	3700	4900	0.606 1.34
29580/ **29520**	60.000 2.3622	107.950 4.2500	25.400 1.0000	25.400 1.0000	19.050 0.7500	91500 20600	140000 31500	3200	4300	0.992 2.19
29582/ **29520**	60.000 2.3622	107.950 4.2500	25.400 1.0000	25.400 1.0000	19.050 0.7500	91500 20600	140000 31500	3200	4300	0.997 2.20
397/ **394A**	60.000 2.3622	110.000 4.3307	22.000 0.8661	21.996 0.8660	18.824 0.7411	89500 20100	120000 27000	3200	4300	0.910 2.01
JHM911244/ **JHM911211**	60.000 2.3622	130.000 5.1181	34.100 1.3425	30.924 1.2175	22.650 0.8917	156000 35000	186000 42000	2700	3600	2.01 4.43
28985/ **28919**	60.325 2.3750	99.979 3.9362	24.605 0.9687	25.400 1.0000	19.050 0.7500	90500 20300	134000 3000	3500	4700	0.762 1.68
28925/ **28921**	60.325 2.3750	100.000 3.9370	25.400 1.0000	25.400 1.0000	19.845 0.7813	90500 20300	134000 30000	3500	4700	0.772 1.70
28985/ **28920**	60.325 2.3750	101.600 4.0000	25.400 1.0000	25.400 1.0000	19.845 0.7813	90500 20300	134000 30000	3500	4700	0.811 1.79
3980/ **3920**	60.325 2.3750	112.712 4.4375	30.162 1.1875	30.048 1.1830	23.812 0.9375	119000 26800	174000 39000	3200	4300	1.33 2.93
HM212044/ **HM212011**	60.325 2.3750	122.238 4.8125	38.100 1.5000	38.354 1.5100	29.718 1.1700	187000 42000	244000 55000	3100	4100	2.02 4.45
5583/ **5535**	60.325 2.3750	122.238 4.8125	43.658 1.7188	43.764 1.7230	36.512 1.4375	194000 43500	283000 63500	3100	4100	2.44 5.38
558/ **552A**	60.325 2.3750	123.825 4.8750	38.100 1.5000	36.678 1.4440	30.162 1.1875	158000 35500	216000 48500	3000	4100	2.10 4.63

FBJ®

Tapered Roller Bearings

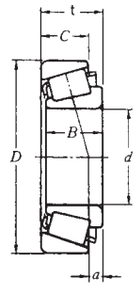

Single Row (Inch)
60.325~65.088mm
2.3750~2.5625inch

Bearing Number	Dimensions					Basic Load Ratings		Limiting Speeds		Weight
	mm inch					N lbf		rev/min		kg lb
	d	D	t	B	C	*Cr*	*Cor*	Grease	Oil	
28682/ 28622	57.150 2.2500	97.630 3.8437	24.608 0.9688	24.608 0.9688	19.446 0.7656	885000 19900	128000 28700	3700	4900	0.747 1.65
387A/ 382	57.150 2.2500	98.425 3.8750	21.000 0.8268	21.946 0.8640	17.826 0.7018	78000 17600	96500 21700	3700	5000	0.628 1.38
387A/ 383A	57.150 2.2500	100.000 3.9370	21.000 0.8268	21.946 0.8640	17.826 0.7018	78000 17600	96500 21700	3700	5000	0.660 1.46
462/ 453X	57.150 2.2500	104.775 4.1250	30.162 1.1875	29.317 1.1542	24.605 0.9687	115000 25800	148000 33000	3500	4700	1.06 2.34
469/ 453X	57.150 2.2500	104.775 4.1250	30.162 1.1875	29.317 1.1542	24.605 0.9687	115000 25800	148000 33000	3500	4700	1.06 2.34
45289/ 45220	57.150 2.2500	104.775 4.1250	30.162 1.1875	30.958 1.2188	23.812 0.9375	130000 29200	169000 38000	3500	4700	1.10 2.43
45290/ 45220	57.150 2.2500	104.775 4.1250	30.162 1.18754	30.958 1.2188	23.812 0.9375	130000 29200	169000 38000	3500	4700	1.10 2.43
45291/ 45220	57.150 2.2500	104.775 4.1250	30.162 1.1875	30.958 1.2188	23.812 0.9375	13000 29200	169000 38000	3500	4700	1.09 2.40
469/ 453A	57.150 2.2500	107.950 4.2500	27.783 1.0938	29.317 1.1542	22.225 0.8750	115000 25800	148000 33000	3500	4700	1.11 2.45
390/ 394A	57.150 2.2500	110.000 4.3307	22.000 0.8661	21.946 0.8640	18.824 0.7411	89500 20100	120000 27000	3200	4300	0.954 2.10
469/ 454	57.150 2.2500	110.000 4.3307	27.795 1.0943	29.317 1.1542	27.000 1.0630	115000 25800	148000 33000	3500	4700	1.24 2.73
3979/ 3920	57.150 2.2500	112.712 4.4375	30.162 1.1875	30.048 1.1830	23.812 0.9375	119000 26800	174000 39000	3200	4300	1.40 3.09
39580/ 39520	57.150 2.2500	112.712 4.4375	30.162 1.1875	30.162 1.1875	23.812 0.9375	138000 31000	195000 43500	3200	4200	1.41 3.11
39581/ 39520	57.150 2.2500	112.712 4.4375	30.162 1.1875	30.162 1.1875	23.812 0.9375	138000 31000	195000 43500	3200	4200	1.40 3.09
33225/ 33462	57.150 2.2500	117.475 4.6250	30.162 1.1875	30.162 1.1875	23.812 0.9375	117000 26200	175000 39500	3000	4000	1.58 3.48
66225/ 66462	57.150 2.2500	117.475 4.6250	33.338 1.3125	31.750 1.2500	23.812 0.9375	130000 29100	153000 34500	3300	4400	1.54 3.40
623/ 612	57.150 2.2500	120.650 4.7500	41.275 1.6250	41.275 1.6250	31.750 1.2500	172000 38500	213000 48000	3300	4400	2.12 4.67
72225C/ 72487	57.150 2.2500	123.825 4.8750	36.512 1.4375	32.791 1.291	25.400 1.0000	154000 34500	188000 42500	2900	3900	1.96 4.32
555S/ 552A	57.150 2.2500	123.825 4.8750	38.100 1.5000	36.678 1.4440	30.162 1.1875	158000 35500	216000 48500	3000	4100	2.18 4.81
78225/ 78551	57.150 2.2500	104.030 5.5130	36.512 1.4375	33.236 1.3085	23.520 0.9260	171000 38500	212000 47500	2600	3400	2.69 5.93
388A/ 382A	57.531 2.2650	96.838 3.8125	21.000 0.8268	21.946 0.8640	15.875 0.6250	78000 17600	96500 21700	3700	5000	0.575 1.27
66589/ 66520	59.972 2.3611	122.238 4.8125	33.338 1.3125	31.750 1.2500	23.812 0.9375	134000 30000	163000 36500	3100	4200	1.66 3.66
H913840/ H913810	59.987 2.3617	146.050 5.7500	41.275 1.6250	39.688 1.5625	25.400 1.0000	199000 744500	234000 52500	2400	3200	3.22 7.10
JLM508748/ JLM508710	60.000 2.3622	95.000 3.7402	24.000 0.9449	24.000 0.9449	19.000 0.7480	83000 18700	122000 27300	3700	4900	0.606 1.34
29580/ 29520	60.000 2.3622	107.950 4.2500	25.400 1.0000	25.400 1.0000	19.050 0.7500	91500 20600	140000 31500	3200	4300	0.992 2.19
29582/ 29520	60.000 2.3622	107.950 4.2500	25.400 1.0000	25.400 1.0000	19.050 0.7500	91500 20600	140000 31500	3200	4300	0.997 2.20
397/ 394A	60.000 2.3622	110.000 4.3307	22.000 0.8661	21.996 0.8660	18.824 0.7411	89500 20100	120000 27000	3200	4300	0.910 2.01
JHM911244/ JHM911211	60.000 2.3622	130.000 5.1181	34.100 1.3425	30.924 1.2175	22.650 0.8917	156000 35000	186000 42000	2700	3600	2.01 4.43
28985/ 28919	60.325 2.3750	99.979 3.9362	24.605 0.9687	25.400 1.0000	19.050 0.7500	90500 20300	134000 3000	3500	4700	0.762 1.68
28925/ 28921	60.325 2.3750	100.000 3.9370	25.400 1.0000	25.400 1.0000	19.845 0.7813	90500 20300	134000 30000	3500	4700	0.772 1.70
28985/ 28920	60.325 2.3750	101.600 4.0000	25.400 1.0000	25.400 1.0000	19.845 0.7813	90500 20300	134000 30000	3500	4700	0.811 1.79
3980/ 3920	60.325 2.3750	112.712 4.4375	30.162 1.1875	30.048 1.1830	23.812 0.9375	119000 26800	174000 39000	3200	4300	1.33 2.93
HM212044/ HM212011	60.325 2.3750	122.238 4.8125	38.100 1.5000	38.354 1.5100	29.718 1.1700	187000 42000	244000 55000	3100	4100	2.02 4.45
5583/ 5535	60.325 2.3750	122.238 4.8125	43.658 1.7188	43.764 1.7230	36.512 1.4375	194000 43500	283000 63500	3100	4100	2.44 5.38
558/ 552A	60.325 2.3750	123.825 4.8750	38.100 1.5000	36.678 1.4440	30.162 1.1875	158000 35500	216000 48500	3000	4100	2.10 4.63

Single Row (Inch)
66.675~69.952mm
2.6250~2.7540inch

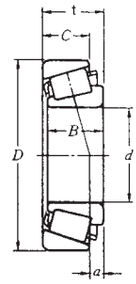

Tapered Roller Bearings

Bearing Number	Dimensions					Basic Load Ratings		Limiting Speeds		Weight
	mm inch					N lbf		rev/min		kg lb
	d	D	t	B	C	*Cr*	*Cor*	Grease	Oil	
L812148/ L812111	66.675 2.6250	103.213 4.0635	17.602 0.6930	17.602 0.6930	11.989 0.4720	60000 13400	78000 17600	3300	4400	0.480 1.06
29590/ 29520	66.675 2.6250	107.950 4.2500	25.400 1.0000	25.400 1.0000	19.050 0.7500	91500 20600	14000 31500	3200	4300	0.860 1.90
395A/ 394A	66.675 2.6250	110.000 4.3307	22.000 0.8661	21.996 0.8660	18.824 0.7411	89500 20100	120000 27000	3200	4300	0.796 1.76
395S/ 394A	66.675 2.6250	110.000 4.3307	22.000 0.8661	21.996 0.8660	18.824 0.7411	89500 20100	120000 27000	3200	4300	0.791 1.74
3984/ 3920	66.675 2.6250	112.712 4.4375	30.162 1.1875	30.048 1.1830	23.812 0.9375	119000 26800	174000 39000	3200	4300	1.18 2.60
3984/ 3925	66.675 2.6250	112.712 4.4375	30.162 1.1875	30.048 1.1830	23.812 0.9375	119000 26800	174000 39000	3200	4300	1.19 2.62
3994/ 3920	66.675 2.6250	112.712 4.4375	30.162 1.1875	30.048 1.1830	23.812 0.9375	119000 26800	174000 39000	3200	4300	1.18 2.60
39590/ 39520	66.675 2.26250	112.712 4.4375	30.162 1.1875	30.162 1.1875	23.812 0.9375	138000 31000	195000 43500	3200	4200	1.19 2.62
HM212049/ HM212010	66.675 2.6250	122.238 4.8105	38.100 1.5000	38.354 1.5100	29.718 1.1700	178000 42000	244000 5500	3100	4100	1.86 4.10
HM212049/ HM212011	66.675 2.6250	122.238 4.8125	38.100 1.5000	38.354 1.5100	29.718 1.1700	187000 42000	244000 55000	3100	4100	1.85 4.08
560/ 552A	66.675 2.6250	123.825 4.8750	38.100 1.5000	36.678 1.4440	30.162 1.1875	158000 35500	216000 48500	3000	4100	1.92 4.23
HM813844/ HM813810	66.675 2.6250	127.000 5.0000	36.512 1.4375	36.510 1.4375	26.988 1.0625	163000 36500	228000 51500	2900	3800	2.03 4.48
641/ 633	66.675 2.6250	130.175 5.1250	41.275 1.6250	41.275 1.6250	31.750 1.2500	194000 43500	26200 59000	2800	3800	2.41 5.31
6386/ 6320	66.675 2.6250	135755 5.3447	53.975 2.1250	56.007 2.2050	44.450 1.7500	278000 62500	380000 85000	2900	3800	3.64 8.03
6389/ 6320	66.675 2.6250	135.755 5.3447	53.975 2.1250	56.007 2.2050	44.450 1.7500	278000 62500	380000 85000	2900	3800	3.63 8.00
641/ 632	66.675 2.6250	136.525 5.3750	41.275 1.6250	41.275 1.6250	31.750 1.2500	194000 43500	262000 59000	2800	3800	2.74 6.04
H414242/ H414210	66.675 2.6250	136.525 5.3750	41.275 1.6250	41.275 1.6250	31.750 1.2500	226000 51000	293000 66000	2700	3700	2.75 6.06
399A 394A	68.262 2.6875	110.000 4.3307	22.000 0.8661	21.996 0.8660	18.824 0.7411	89500 20100	120000 27000	3200	4300	0.764 1.68
399AS/ 394A	68.262 2.6875	11.000 4.3307	22.000 0.8661	21.996 0.8660	18.824 0.7411	89500 20100	120000 27000	3200	4300	0.756 1.67
480/ 472	68.262 2.6875	120.000 4.7244	29.794 1.1730	29.007 1.1420	24.237 0.9542	128000 28700	177000 4000	3000	4000	1.37 3.02
560S/ 552A	68.262 2.6875	123.825 4.5750	38.100 1.5000	36.678 1.4440	30.162 1.1875	158000 35500	216000 48500	3000	4100	1.87 4.12
H414245/ H414210	68.262 2.6875	136.525 5.3750	41.275 1.6250	41.275 1.6250	31.750 1.2500	226000 51000	293000 66000	2700	3700	2.70 5.95
H715343/ H715311	68.262 2.6875	136.525 5.3750	46.038 1.8125	46.038 1.812	36.512 1.4375	224000 50500	355000 80000	2600	3500	3.24 7.14
29675/ 29620	69.850 2.7500	112.712 4.4375	25.400 1.0000	25.400 1.0000	19.050 0.7500	95500 21500	151000 34000	3100	4100	0.949 2.09
33275/ 33462	69.850 2.7500	117.475 4.6250	30.162 1.1875	30.162 1.1875	23.812 0.9375	117000 26200	175000 39500	3000	4000	1.28 2.82
482/ 472A	69.850 2.7500	120.000 4.7244	29.002 1.1418	29.007 1.1420	23.444 0.9230	128000 28700	177000 40000	3000	4000	1.30 2.87
482/ 472	69.850 2.7500	120.000 4.7244	29.794 1.1730	29.007 1.1420	24.237 0.9542	128000 28700	177000 40000	3000	4000	1.33 2.93
47487/ 47420	69.850 2.7500	120.000 4.7244	32.545 1.2813	32.545 1.2813	26.195 1.0313	147000 33000	214000 48000	3000	4000	1.47 3.24
29675/ 29630	69.850 2.7500	120.650 4.7500	25.400 1.0000	25.400 1.000	19.050 0.7500	95500 21500	151000 3400	3100	4100	1.17 2.58
566/ 563	69.850 2.7500	127.000 5.0000	36.512 1.4375	36.170 1.424	28.575 1.1250	163000 36500	229000 51500	2900	3800	1.92 4.23
643/ 632	69.850 2.7500	136.525 5.3750	41.275 1.6250	41.275 1.625	31.750 01.2500	194000 43500	26200 59000	2800	3800	2.63 5.80
655/ 653	69.850 2.7500	146.050 5.7500	41.275 1.6250	41.275 1.6250	31.750 1.2500	206000 46500	295000 66500	2500	3300	3.28 7.23
745A/ 742	69.850 2.7500	150.089 5.9090	44.450 1.7500	46.672 1.8375	36.512 1.4375	261000 585000	360000 81000	2400	3200	3.92 8.64
835/ 832	69.850 2.7500	168.275 6.250	53.975 2.1250	56.363 2.2190	41.275 1.6250	340000 76000	460000 103000	2200	3000	6.13 13.5
34274/ 34478	69.952 2.7540	121.442 4.7812	24.608 0.9688	23.012 0.9060	17.462 0.6875	91000 20500	127000 28600	2900	3800	1.11 2.45
34274/ 34492A	69.952 2.7540	125.052 4.9233	23.731 0.9343	23.012 0.9060	16.400 0.6457	91000 20500	127000 28600	2900	3800	1.18 2.60

FBJ®

Tapered Roller Bearings

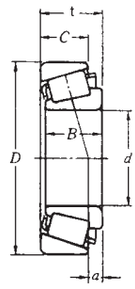

Single Row (Inch)
70.000~76.200mm
2.7559~3.0000inch

Ball / Roller Bearing

Bearing Number	Dimensions					Basic Load Ratings		Limiting Speeds		Weight
	mm inch					N lbf		rev/min		kg lb
	d	D	t	B	C	*Cr*	*Cor*	Grease	Oil	
JLM81349/ JLM813010	70.000 2.7559	110.000 4.3307	26.000 1.0236	25.000 0.9843	20.5000 0.8071	97000 21800	150000 33500	3200	4200	0.889 1.96
JM612940/ JM612910	70.000 2.7559	115.000 4.5276	29.000 1.1417	29.000 1.1417	23.000 0.9055	124000 28000	171000 38500	3100	4100	1.13 2.49
484/ 472	70.000 2.7559	120.000 4.7244	29.794 1.1730	29.007 1.1420	24.237 0.9542	128000 28700	177000 40000	3000	4000	1.33 2.93
JH913848/ JH913811	70.000 2.7559	150.000 5.9055	41.275 1.6250	39.688 1.5625	25.400 1.0000	199000 445000	234000 52500	2400	3200	6.08 6.79
33281/ 33462	71.438 2.8125	117.475 4.6250	30.162 1.1875	30.162 1.1875	23.812 0.9375	117000 26200	175000 39500	3000	4000	1.24 2.73
47490 47420	71.438 2.8125	120.000 4.7244	32.545 1.2813	32.545 1.2813	26.195 1.0313	14700 33000	214000 48000	3000	4000	1.42 3.13
567A/ 563	71.438 2.8125	127.000 5.0000	36.512 1.4375	36.170 1.4240	28.575 1.1250	163000 36500	229000 51500	2900	3800	1.87 4.12
644/ 632	71.438 2.8125	136.525 5.3750	41.275 1.6250	41.275 1.6250	31.750 1.2500	194000 43500	262000 59000	2800	3800	2.57 5.67
H414249/ H414210	71.438 2.8125	136.525 5.3750	41.275 1.6250	41.275 1.625	31.750 01.2500	226000 51000	293000 66000	2700	3700	2.58 5.69
H715345/ H715311	71.438 2.8125	136.525 5.3750	46.038 1.8125	46.038 1.812	36.512 51.4375	224000 50500	355000 80000	2600	3500	3.11 6.86
29685/ 29620	73.025 2.8750	112.712 4.4375	25.400 1.0000	25.400 1.0000	19.050 0.7500	95500 211500	151000 34000	3100	4100	0.873 1.93
33287/ 33462	73.025 2.875	117.475 4.6250	30.162 1.1875	30.162 1.1875	23.812 0.9375	11700 26200	175000 39500	3000	4000	1.19 2.62
33287/ 33472	73.025 2.8750	120.000 4.7244	29.794 1.1730	30.162 1.1875	23.444 0.9230	11700 26200	175000 39500	3000	4000	1.28 2.82
567/ 563	73.025 2.8750	127.000 5.000	36.512 1.4375	36.170 1.4240	28.575 1.1250	163000 36500	229000 51500	2900	3800	1.82 4.01
576/ 572	73.025 2.8750	139.992 5.5115	36.512 1.4375	36.098 1.4212	28.575 1.1250	178000 40000	265000 59500	2600	3400	2.53 5.58
4640/ 6420	73.025 2.8750	149.225 5.8750	53.975 2.1250	54.229 2.1350	44.450 1.7500	287000 64500	410000 92000	2500	3400	4.42 9.74
744/ 742	73.025 2.8750	150.089 5.9090	44.45 1.7500	046.672 1.8375	36.512 1.4375	261000 58500	3960000 81000	2400	3200	3.79 8.36
29688/ 29620	73.817 2.9062	112.712 4.4375	25.400 1.0000	25.400 1.0000	19.050 0.7500	95500 21500	151000 34000	3100	4100	0.860 1.90
568/ 563	73.817 2.9062	127.000 5.0000	36.512 1.4375	36.170 1.4240	28.575 1.1250	163000 36500	229000 51500	2900	3800	1.80 3.97
577/ 572	74.612 2.9375	139.992 5.5515	36.512 1.4375	36.098 1.4212	28.575 1.1250	178000 40000	265000 59500	2600	3400	2.48 5.47
JLM714149/ JLM714110	75.000 2.9528	115.000 4.5276	25.000 0.9843	25.000 0.9843	19.000 0.7480	94500 21300	143000 3200	3000	4000	0.875 1.93
JM714249/ JM714210	75.000 2.9528	120.000 4.7244	31.000 1.2205	29.500 1.1614	25.000 0.9843	131000 29400	197000 44500	2900	3900	1.29 2.84
JH415647/ JH415610	75.000 2.9528	145.000 5.7087	51.000 2.0079	51.000 2.0079	42.000 1.6535	287000 64500	410000 92000	2500	3400	3.81 8.40
L814749/ L814710	79.200 3.0000	109.538 4.3125	19.050 0.7500	19.050 0.7500	15.083 0.5938	63000 14200	115000 25800	3100	4100	0.579 1.28
34300/ 34478	76.200 3.0000	121.442 4.7812	24.608 0.9688	23.012 0.9060	17.462 0.6875	91000 20500	127000 286000	2900	3800	0.982 2.17
34301/ 34478	76.200 3.0000	121.442 4.7812	24.608 0.9688	23.012 0.9060	17.462 0.6875	91000 30500	127000 286000	2900	3800	0.977 2.15
42687/ 46260	76.200 3.0000	127.000 5.0000	30.162 1.1875	31.000 1.2205	22.225 0.8750	135000 30500	194000 43500	2800	3700	1.46 3.22
42688/ 42620	76.200 3.0000	127.000 5.000	30.162 1.1875	31.000 1.2205	22.225 0.8750	135000 30500	194000 43500	2800	3700	1.44 3.18
47678/ 47620	76.200 3.0000	133.350 5.2500	33.338 1.3125	33.338 1.3125	26.195 1.0313	153000 34500	235000 53000	2600	3500	1.92 4.23
47679/ 47620	76.200 3.0000	133.350 5.2500	33.338 1.3125	33.338 1.3125	26.195 1.0313	153000 34500	235000 5300	2600	3500	1.93 4.26
47680/ 47620	76.200 3.0000	133.350 5.2500	33.338 1.3125	33.338 1.3125	26.195 1.0313	153000 34500	235000 53000	2600	3500	1.94 4.28
HM516442/ HM516410	796.200 3.0000	133.350 5.2500	39.688 1.5625	39.688 1.5625	32.545 1.2813	177000 40000	305000 68000	2600	3500	2.43 5.36
5760/ 5735	76.200 3.0000	135.733 5.3438	44.450 1.7500	46.100 1.8150	34.925 1.3750	211000 47500	33000 74500	2700	3500	2.75 6.06
495A/ 493	76.200 3.0000	136.525 5.3750	30..162 1.1875	29.769 1.1720	22.225 0.8750	129000 29000	189000 42500	2600	3500	1.83 4.03
495AX/ 493	76.200 3.0000	136.525 5.3750	30.162 1.1878	29.769 1.1720	2.225 0.8750	129000 29000	189000 42500	2600	3500	1.82 4.01

Single Row (Inch)
76.200~82.550mm
3.0000~3.2500inch

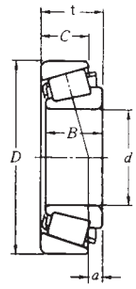

Tapered Roller Bearings

Bearing Number	Dimensions (mm / inch)					Basic Load Ratings (N / lbf)		Limiting Speeds (rev/min)		Weight (kg / lb)
	d	D	t	B	C	Cr	Cor	Grease	Oil	
575/ 572	76.200 3.0000	139.992 5.5115	36.512 1.4375	36.098 1.4212	28.575 1.1250	178000 40000	265000 549500	2600	3400	2.43 5.36
575S/ 572	76.200 3.0000	139.992 5.5115	36.51 1.4375	36.098 1.4212	28.575 1.1250	178000 40000	265000 59500	2600	3400	2.41 5.31
659/ 653	76.200 3.0000	146.050 5.7500	41.275 1.6250	41.275 1.6250	31.750 1.2500	206000 46500	295000 66500	2500	3300	3.04 6.70
6461/ 6420	76.200 3.0000	149.225 5.8750	53.975 2.1250	54.229 2.1350	44.450 1.7500	287000 64500	410000 92000	2500	3400	4.26 9.39
6461A/ 6420	76.200 3.000	149.225 5.8750	53.975 2.1250	54.229 2.1350	44.450 1.7500	287000 64500	410000 92000	2500	3400	4.23 9.33
748S/ 742	76.200 3.0000	150.089 5.9090	44.450 1.7500	46.672 1.8375	36.51 1.4375	261000 58500	360000 81000	2400	3200	3.66 8.07
6576/ 6535	76.200 3.000	161.925 6.3750	53.975 2.1250	55.100 2.1693	42.862 1.6875	310000 69000	460000 104000	2300	3000	5.44 12.0
H917840/ H917840	76.200 3.0000	180.975 7.1250	53.975 2.1250	53.183 2.0938	53.720 1.4063	325000 725000	415000 93500	1900	2600	6.57 14.5
HH221430/ HH221410	76.200 3.0000	190.500 7.500	57.150 2.2500	57.531 2.2650	46.038 1.8125	445000 99500	610000 137000	1900	2600	8.69 19.2
LM814849/ LM814810	77.788 3.0625	117.475 4.6250	25.400 1.0000	25.400 1.000	19.050 0.7500	99500 22400	162000 36500	2900	3900	0.932 2.06
34306/ 34478	77.788 3.0625	121.442 4.7812	24.608 0.9688	23.012 0.9060	17.462 0.6875	91000 20500	127000 28600	2900	3800	0.943 2.08
34307/ 34478	77.788 3.0625	121.442 4.7812	24.608 0.9688	23.012 0.9060	23.012 0.6875	17.462 20500	91000 28600	2900	3800	0.930 2.05
42690/ 42620	77.788 3.0625	127.000 5.0000	30.162 1.1875	31.000 1.2205	22.225 0.8750	135000 30500	194000 43500	2800	3700	1.41 3.11
495AS/ 493	77.788 3.0625	136.525 5.3750	30.162 1.1875	26.769 1.1720	22.225 0.8750	129000 29000	189000 42500	2600	3500	1.78 3.92
H715348/ H715311	77.788 3.0625	136.525 5.3750	46.038 1.8125	46.038 1.812	36.512 1.4375	224000 50500	355000 80000	2600	3500	2.84 6.26
661/ 653	79.375 3.1250	146.050 5.7500	41.275 1.6250	41.275 1.6250	31.750 1.2500	206000 46500	295000 66500	2500	3300	2.91 6.42
756A/ 752	79.375 3.1250	161.925 6.3750	47.625 1.8750	48.260 1.9000	38.100 1.5000	270000 60500	385000 86500	2300	3100	4.55 10.0
HH221431/ HH221410	79.375 3.1250	190.500 7.5000	57.150 2.2500	57.531 2.2650	46.038 1.8125	445000 99500	610000 137000	1900	2600	8.52 18.8
JM515649/ JM515610	80.000 3.1496	130.000 5.1181	35.000 1.3780	34.000 1.3386	28.500 1.1220	166000 37500	249000 56000	2700	3600	1.73 3.81
47681/ 47620	80.962 3.1875	133.350 5.2500	33.338 1.3125	33.338 1.3125	26.195 1.0313	153000 34500	235000 5300	2600	3500	1.78 3.92
496/ 493	80.962 3.1875	136.525 5.3750	30.162 1.1875	29.769 1.1720	22.225 0.8750	129000 29000	189000 42500	2600	3500	1.69 3.75
581/ 572	80.962 3.1875	139.992 5.5115	36.512 1.4375	36.098 1.4212	28.575 1.1250	178000 40000	265000 59500	2600	3400	2.26 4.98
740/ 742	80.962 3.1875	150.089 5.9090	44.450 1.7500	46.672 1.8375	36.51 1.4375	261000 58500	360000 81000	2400	3200	3.43 7.56
27687/ 27620	82.550 3.2500	125.412 4.9375	25.400 1.0000	25.400 1.000	19845 0.7813	102000 22900	163000 36500	2700	3600	1.07 2.36
47686/ 47620	82.550 3.2500	133.350 5.2500	33.338 1.3125	33.338 1.3125	26.195 1.0313	153000 34500	235000 53000	2600	3500	1.72 3.79
47686/ 47620A	82.550 3.2500	133.350 5.2500	33.338 1.3125	33.338 1.3125	26.195 1.0313	153000 34500	235000 53000	2600	3500	1.73 3.81
47687/ 47620	82.550 3.2500	133.350 5.2500	33.338 1.3125	33.338 1.3125	26.195 1.0313	153000 34500	235000 53000	2600	3500	1.71 3.77
HM516448/ HM516410	82.550 3.2500	133.350 5.2500	39.688 1.5625	39.688 1.5625	32.545 1.2813	177000 40000	305000 68000	2600	3500	2.16 4.76
HM516449/ HM516410	82.550 3.2500	133.350 5.2500	39.688 1.5625	39.688 1.5625	32.545 1.2813	177000 40000	305000 68000	2600	3500	2.18 4.81
495/ 493	82.550 3.2500	136.525 5.3750	30.162 1.1875	29.769 1.1720	22.225 0.8750	129000 29000	189000 42500	2600	3500	1.64 3.62
580/ 572	82.550 3.2500	139.992 5.5115	36.512 1.4375	36.098 1.4212	28.575 1.1250	178000 40000	265000 59500	2600	3400	2.20 4.85
582/ 572	82.550 3.2500	139.992 5.5115	36.512 1.4375	36.098 1.4212	28.575 1.1250	178000 40000	265000 59500	2600	3400	2.19 4.83
663/ 653	82.550 3.2500	146.050 5.7500	41.275 1.6250	41.275 1.6250	31.750 1.2500	206000 465000	295000 66500	2500	3300	2.78 6.13
749A/ 742	82.550 3.2500	150.089 5.9090	44.450 1.7500	46.672 1.8375	36.512 1.4375	261000 58500	360000 81000	2400	3200	3.37 7.43
595/ 592A	82.550 3.2500	152.400 6.0000	36.688 1.5625	36.322 1.4300	30.162 1.1875	180000 40500	279000 62500	2300	3100	3.02 6.66

FBJ®

Tapered Roller Bearings

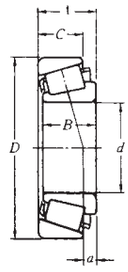

Single Row (Inch)
82.550~90.000mm
3.2500~3.5433inch

Bearing Number	Dimensions					Basic Load Ratings		Limiting Speeds		Weight
	mm inch					N lbf		rev/min		kg lb
	d	D	t	B	C	*Cr*	*Cor*	Grease	Oil	
663/ **652**	82.550 3.2500	152.400 6.000	41.275 1.6250	41.275 1.6250	31.750 1.2500	206000 46500	295000 66500	2500	3300	3.15 6.94
757/ **752**	82.550 3.2500	161.925 6.3750	47.625 1.8750	48.260 1.9000	38.100 1.5000	270000 60500	385000 86500	2300	3100	4.42 9.74
6559C/ **6535**	82.550 3.2500	161.925 6.3750	53.975 2.1250	55.100 2.1693	42.862 1.6875	310000 69000	460000 104000	2300	3000	5.09 11.2
842/ **832**	82.550 3.2500	168.275 6.6250	53.975 2.1250	56.363 2.2190	41.275 1.6250	340000 76000	460000 103000	2200	3000	5.46 12.0
27689/ **27620**	83.345 3.2813	125.412 4.9375	25.400 1.0000	25.400 1.000	19.84 0.7813	102000 22900	163000 36500	2700	3600	1.06 2.34
27690/ **27620**	83.345 3.2813	125.412 4.9375	25.400 1.0000	25.400 1.0000	19.845 0.7813	102000 22900	163000 36500	2700	3600	1.05 2.32
27691/ **27620**	83.345 3.2813	125.412 4.9375	25.400 1.000	25.400 1.000	19845 0.7813	102000 229000	163000 365000	2700	3600	1.04 2.29
498/ **493**	84.138 3.3125	136.525 5.3750	30.162 1.1875	29.769 1.1720	22.225 0.8750	129000 29000	189000 42500	2600	3500	1.60 3.53
JM716648/ **JM716610**	88.000 3.3465	130.000 5.1181	30.000 1.1811	29.000 1.1417	24.000 0.9449	135000 30500	214000 48000	2600	3500	1.37 3.02
JM716649/ **JM716610**	85.000 3.3465	130.000 5.1181	30.000 1.1811	29.000 1.1417	24.000 0.9449	135000 30500	214000 48000	2600	3500	1.39 3.06
JHM516849/ **JHM516810**	85.000 3.3465	140.000 5.5118	39.000 1.5354	38.000 1.4961	31.500 1.2402	197000 44500	297000 67000	2500	3400	2.30 5.07
749/ **742**	85.026 3.3475	150.089 5.9090	44.450 1.7500	46.672 1.8375	36.512 1.4375	261000 58500	260000 8100	2400	3200	3.25 7.17
749S/ **742**	85.026 3.3475	150.089 5.9090	44.450 1.7500	46.672 1.8375	36.512 1.4375	261000 58500	360000 81000	2400	3200	3.24 7.14
497/ **492A**	85.725 3.3.750	133.350 5.2500	30.162 1.1875	29.769 1.1720	22.225 0.8750	129000 29000	189000 42500	2600	3500	1.43 3.15
497/ **493**	85.725 3.3750	136.525 5.3750	30.162 1.1875	29.769 1.1720	22.225 0.8750	129000 29000	189000 42500	2600	3500	1.55 3.42
497A/ **493**	85.725 3.3750	136.525 5.3750	30.162 1.1875	29.769 1.1720	22.225 0.8750	129000 29000	189000 42500	2600	3500	1.53 3.37
HM617049/ **HM617010**	85.725 3.3750	142.138 5.5960	42.862 1.6875	42.862 1.6875	34.133 1.3438	216000 48500	350000 78500	2500	3300	2.69 5.93
665/ **653**	85.725 3.3750	146.050 5.7500	41.275 1.6250	41.275 1.6250	31.750 1.2500	206000 46500	295000 66500	2500	3300	2.65 5.84
665A/ **653**	85.725 3.3750	146.050 5.7500	41.275 1.6250	41.275 1.6250	31.750 1.2500	206000 46500	295000 66500	2500	3300	2.63 5.80
596/ **592A**	85.725 3.3750	152.400 6.0000	39.688 1.5625	36.322 1.4300	30.162 1.1875	180000 40500	279000 62500	2300	3100	2.90 6.39
758 **752**	85.725 3.3750	161.925 6.3750	47.625 1.8750	48.260 1.9000	38.100 1.5000	270000 60500	385000 86500	2300	3100	4.26 9.39
42346 **42584**	87.960 3.4630	148.430 5.8437	28.575 1.1250	28.971 1.1406	21.433 0.8438	138000 31000	215000 48500	2300	3100	1.99 4.39
LL217849/ **LL217810**	88.900 3.5000	121.442 4.7812	15.083 0.5938	15.083 0.5938	11.112 0.4375	56500 12700	88000 19800	2700	3600	0.452 0.996
L217849/ **L217810**	88.900 3.5000	123.825 4.8750	20.638 0.8125	20.638 0.8125	16.670 0.6563	80000 18000	141000 31500	2700	3500	0.737 1.63
42350/ **42584**	88.900 3.5000	148.430 5.8437	28.575 1.1250	28.971 1.1406	21.433 0.8438	138000 31000	215000 485000	2300	3100	1.96 4.32
593/ **592A**	88.900 3.5000	152.400 6.0000	39.688 1.5625	36.322 1.4300	30.162 1.1875	18000 40500	279000 625000	2300	3100	2.78 6.13
593A/ **592A**	88.900 3.5000	152.400 6.0000	39.688 1.5625	36.322 1.4300	30.162 1.1875	180000 40500	279000 625000	2300	3100	2.76 6.09
759/ **752**	88.900 3.5000	161.925 6.3750	47.625 1.8750	48.260 1.9000	38.100 1.5000	270000 60500	385000 86500	2300	3100	4.06 9.02
766/ **752**	88.900 3.5000	161.925 6.3750	47.625 1.8750	48.260 1.9000	38.100 1.5000	270000 60500	385000 86500	2300	3100	4.07 8.97
6580/ **6535**	88.900 3.5000	161.925 6.3750	53.975 2.1250	55.100 2.1693	42.862 1.6875	310000 69000	460000 104000	2300	3000	4.73 10.40
850/ **832**	88.900 3.5000	168.275 6.250	53.975 2.1250	56.363 2.2190	41.275 1.6250	340000 76000	460000 103000	2200	3000	5.08 11.20
HM218248/ **HM21821**	89.974 3.5423	146.975 5.7864	40.000 1.5748	40.000 1.5748	32.500 1.2795	227000 51000	340000 76500	2400	3200	2.55 2.62
JM718149/ **JM718110**	90.000 3.5433	145.000 5.7087	35.000 1.3780	34.000 1.3386	27.000 1.0630	189000 42500	27900 62500	2400	3200	2.14 4.72

Single Row (Inch)
90.000~101.600mm
3.5433~4.000inch

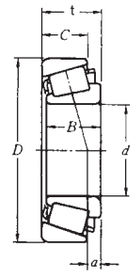

Tapered Roller Bearings

Bearing Number	Dimensions					Basic Load Ratings		Limiting Speeds		Weight
	mm inch					N lbf		rev/min		kg lb
	d	D	t	B	C	*Cr*	*Cor*	Grease	Oil	
JHM318448/ **JHM318410**	90.000 3.5433	155.000 6.1024	44.000 1.7323	44.000 1.7323	35.500 1.3976	270000 60500	385000 86500	2300	3100	3.32 7.32
J90354/ **J90748**	90.000 3.5433	190.000 7.4803	50.800 2.0000	46.038 1.8125	31.750 1.2500	281000 63500	365000 82000	1800	2400	6.32 13.9
760/ **752**	90.488 3.5625	161.925 6.3750	47.625 1.8750	48.260 1.9000	38.100 1.5000	270000 60500	385000 86500	2300	3100	4.01 8.84
47890/ **47820**	92.075 3.6250	146.050 5.7500	33.338 1.3125	34.925 1.3750	26.195 1.0313	163000 37000	266000 59500	2400	3100	2.08 4.59
598/ **592A**	92.075 3.6250	152.400 6.0000	39.688 1.5625	36.322 1.4300	30.162 1.1875	180000 40500	279000 62500	2300	3100	2.65 5.84
598A/ **592A**	92.075 3.6250	152.400 6.0000	39.688 1.5625	36.322 1.4300	30.162 1.1875	180000 40500	279000 62500	2300	3100	2.63 5.80
681/ **672**	92.075 3.6250	168.275 6.6250	41.275 1.6250	41.275 1.6250	30.162 1.1875	222000 50000	340000 77000	2100	2800	3.87 8.53
681A/ **672**	92.075 3.6250	168.275 6.6250	41.275 1.6250	41.275 1.6250	30.162 1.1875	222000 50000	340000 77000	2100	2800	3.86 8.51
42368/ **42584**	93.662 3.6875	148.430 5.8437	28.575 1.1250	28.971 1.1406	21.433 0.8438	138000 31000	215000 48500	2300	3100	1.80 3.97
JM719149/ **JM719113**	95.000 3.7402	150.000 5.9055	35.000 1.3780	34.000 1.3386	27.000 1.0630	180000 40500	278000 62500	2300	3100	2.19 4.83
L319249/ **L319210**	95.250 3.7500	130.175 5.1250	20.638 0.8125	21.433 0.8438	16.670 0.6536	81000 18300	147000 33000	2500	3300	0.789 1.74
47896/ **47820**	95.250 3.7500	146.050 5.7500	33.338 1.3125	34.925 1.3750	26.195 1.0313	163000 37000	266000 59500	2400	3100	1.95 4.30
594A/ **592XE**	95.250 3.7500	147.638 5.8125	35.717 1.4062	36.322 1.4300	26.192 1.0312	180000 40500	279000 62500	2300	3100	2.09 4.61
594A/ **592XS**	95.250 3.7500	147.638 5.8125	35.717 1.4062	36.322 1.4300	26.192 1.0312	180000 40500	279000 62500	2300	3100	2.09 4.61
42375/ **42584**	95.250 3.7500	148.430 5.8437	28.575 1.1250	28.971 1.1406	21.433 0.8438	138000 31000	215000 48500	2300	3100	1.75 3.86
594/ **592A**	95.250 3.7500	152.400 6.0000	39.688 1.5625	36.322 1.4300	30.162 1.1875	180000 40500	279000 62500	2300	3100	2.51 5.53
594A/ **592A**	95.250 3.7500	152.400 6.0000	39.688 1.5625	36.322 1.4300	30.162 1.1875	180000 40500	279000 62500	2300	3100	2.51 5.53
52375/ **52618**	95.250 3.7500	157.162 6.1875	36.512 1.4375	36.116 1.4219	26.195 1.0313	188000 42000	305000 68000	2200	2900	2.76 6.09
683/ **672**	95.250 3.7500	168.275 6.6250	41.275 1.6250	41.275 1.6250	30.162 1.1875	222000 50000	340000 77000	2100	2800	3.72 8.20
HH221440/ **HH221410**	95.250 3.7500	190.500 7.5000	57.150 2.2500	57.531 2.2650	46.038 1.8125	445000 99500	610000 13700	1900	2600	7.50 16.5
42381/ **42584**	96.838 3.8125	148.430 5.8437	28.575 1.1250	28.971 1.1406	21.433 0.8428	138000 31000	215000 48500	2300	3100	1.69 3.73
90381/ **90744**	96.838 3.8125	188.912 7.4375	50.800 2.0000	46.038 1.8125	31.750 1.2500	281000 63500	365000 82000	1800	2400	5.67 12.5
52387/ **52618**	98.425 3.8750	157.162 6.1875	36.512 1.4375	36.116 1.4219	26.195 1.0313	188000 42000	305000 68000	2200	2900	2.62 5.78
685/ **672**	98.425 3.8750	168.275 6.6250	41.275 1.6250	41.275 1.6250	30.162 1.1875	222000 50000	340000 77000	2100	2800	3.56 7.85
HH224334/ **HH224310**	99.974 3.9360	212.725 8.3750	66.675 2.6250	66.675 2.6250	53.975 2.1250	575000 129000	810000 182000	1700	2300	11.5 25.4
JM720249/ **JM720210**	100.000 3.9370	155.000 6.1024	36.000 1.4173	35.000 1.3780	28.000 1.1024	192000 43000	31000 69500	2200	2900	2.40 5.29
JHM720249/ **JHM720210**	100.000 3.9370	160.000 6.2992	41.000 1.6142	40.000 1.5748	32.000 1.2598	235000 53000	370000 83500	2200	2900	3.04 6.70
52393/ **52618**	100.012 3.9375	157.162 6.1875	36.512 1.4375	36.116 1.4219	26.195 1.0313	188000 42000	305000 68000	2200	2900	2.55 5.62
52400/ **52618**	101.600 4.0000	157.162 6.1875	36.512 1.4375	36.116 1.4219	26.195 1.0313	188000 42000	305000 68000	2200	2900	2.48 5.47
52400/ **52618**	101.600 4.0000	161.925 6.3750	39.688 1.5625	36.116 1.4219	29.370 1.1563	188000 42000	305000 68000	2200	2900	2.89 6.37
687/ **672**	101.600 4.0000	168.275 6.6250	41.275 1.6250	41.275 1.6250	30.162 1.1875	222000 50000	340000 77000	2100	2800	3.40 7.50
780/ **772**	101.600 4.0000	180.975 7.1250	47.625 1.8750	48.006 1.8900	38.100 1.5000	285000 64000	430000 96500	2000	2700	5.11 11.3
861/ **854**	101.600 4.0000	190.500 7.5000	57.150 2.2500	57.531 2.2650	44.450 1.7500	380000 855000	555000 124000	2000	2600	7.00 15.4

FBJ®

Tapered Roller Bearings

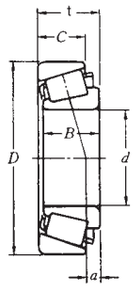

Single Row (Inch)
101.600~127.000mm
4.0000~5.0000inch

Bearing Number	Dimensions					Basic Load Ratings		Limiting Speeds		Weight
	mm inch					N lbf		rev/min		kg lb
	d	D	t	B	C	*Cr*	*Cor*	Grease	Oil	
HH221449/ **HH221410**	101.600 4.0000	190.500 7.5000	57.150 2.2500	57.531 2.2650	46.038 1.8125	445000 99500	610000 137000	1900	2600	7.06 15.6
HH221449A/ **HH221410**	101.600 4.0000	190.500 7.5000	57.150 2.2500	57.531 2.2650	46.038 1.8125	445000 99500	610000 137000	1900	2600	7.06 15.6
941/ **932**	101.600 4.0000	212.725 8.3750	66.675 2.6250	66.675 2.6250	53.975 2.1250	475000 107000	695000 156000	1800	2300	11.2 24.7
HH224335/ **HH224310**	101.600 4.0000	212.725 8.3750	66.675 2.6250	66.675 2.6250	53.975 2.1250	575000 129000	810000 182000	1700	2300	11.3 24.9
782/ **772**	104.775 4.1250	180.975 7.1250	47.625 1.8750	48.006 1.8900	38.100 1.5000	285000 64000	430000 96500	2000	2700	4.92 10.8
786/ **772**	104.775 4.1250	180.975 7.1250	47.625 1.8750	48.006 1.8900	38.100 1.5000	285000 64000	430000 96500	2000	2700	4.90 10.8
787/ **772**	104.775 4.1250	180.975 7.1250	47.625 1.8750	48.006 1.8900	38.100 1.5000	285000 64000	430000 96500	2000	2700	4.90 10.8
37425/ **37625**	107.950 4.2500	158.750 6.2500	23.020 0.9063	21.438 0.8440	15.875 0.6250	102000 23000	166000 37500	2100	2800	1.37 3.02
M522546/ **M522510**	107.950 4.2500	159.987 6.2987	34.925 1.3750	34.925 1.3750	26.988 1.0625	167000 375000	320000 72500	2100	2800	2.37 5.23
56425/ **56650**	107.950 4.2500	165.100 6.5000	36.51 1.4375	36.512 1.4375	26.988 1.0625	191000 43000	315000 70500	2100	2700	2.69 5.93
56425/ **56662**	107.950 4.2500	168.275 6.6250	36.512 1.4375	36.512 1.4375	26.988 1.0625	191000 43000	315000 70500	2100	2700	2.87 6.33
936/ **932**	107.950 4.2500	212.725 8.3750	66.675 2.6250	66.675 2.6250	53.975 2.1250	475000 107000	695000 156000	1800	2300	10.7 23.6
37431/ **37625**	109.538 4.3125	158.750 6.2500	23.020 0.9063	21.438 0.8440	15.875 0.6250	102000 23000	166000 37500	2100	2800	1.33 2.93
LM522548/ **LM522510**	109.987 4.3302	159.987 6.2987	34.925 1.3750	34.925 1.3750	26.988 1.0625	167000 37500	320000 72500	2100	2800	2.24 4.94
LM522549/ **LM522510**	109.987 4.3302	159.987 6.2987	34.925 1.3750	34.925 1.3750	26.988 1.0625	167000 37500	320000 72500	2100	2800	2.27 5.00
64433/ **64700**	109.992 4.3304	177.800 7.0000	41.275 1.6250	41.275 1.6250	30.162 1.1875	232000 52000	375000 84000	1900	2600	3.77 8.31
JM822049/ **JM822010**	110.000 4.3307	165.000 6.4961	35.000 1.3780	35.000 1.3780	26.500 1.4033	191000 43000	315000 70500	2100	2700	2.52 5.56
JHM522649/ **JHM522610**	110.000 4.3307	180.000 7.0866	47.000 1.8504	46.000 1.8110	38.000 1.4961	305000 68500	480000 108000	1900	2600	4.61 10.2
H924045/ **H924010**	111.125 4.3750	214.312 8.4375	55.562 2.1875	52.388 2.0625	39.688 1.5625	405000 91000	560000 126000	1500	2000	8.18 18.0
64450/ **64700**	114.300 4.5000	177.800 7.0000	41.275 1.6250	41.275 1.6250	30.162 1.1875	232000 52000	375000 84000	1900	2600	3.52 7.76
64450/ **64708**	114.300 4.5000	179.974 7.0856	41.275 1.6250	41.275 1.6250	30.162 1.1875	232000 52000	375000 84000	1900	2600	3.67 8.09
68450/ **68712**	114.300 4.5000	180.975 7.1250	34.925 1.3750	31.750 1.2500	25.400 1.0000	169000 38000	245000 55000	1900	2500	2.93 6.46
938/ **932**	114.300 4.5000	212.725 8.3750	66.675 2.6250	66.675 2.6250	53.975 2.1250	475000 107000	695000 156000	1800	2300	10.1 22.3
HH224346/ **HH224310**	114.300 4.5000	212.725 8.3750	66.675 2.6250	66.675 2.6250	53.975 2.1250	575000 129000	810000 182000	1700	2300	10.2 22.5
HM926740/ **HM926710**	114.300 4.5000	228.600 9.0000	53.975 2.1250	49.428 1.9460	38.100 1.5000	430000 96500	620000 140000	1400	1900	9.76 21.5
71453/ **71750**	115.087 4.531	190.500 07.5000	47.625 1.8750	49.212 1.9375	34.925 1.3750	300000 67500	475000 107000	1400	2500	5.11 11.3
71455/ **71750**	115.087 4.5310	190.500 7.5000	47.625 1.8750	49.212 1.9375	34.925 1.3750	300000 67500	475000 107000	1800	2500	5.08 11.2
68462/ **68712**	117.475 4.6250	180.975 7.1250	34.925 1.3750	31.750 1.2500	25.400 1.0000	169000 38000	245000 550000	1900	2500	2.78 6.13
JL724348/ **JL724314**	120.000 4.7244	170.000 6.6929	25.400 1.0000	25.400 1.0000	19.050 0.7500	127000 28600	210000 47000	2000	2600	1.67 3.68
95475/ **95925**	120.650 4.7500	234.950 9.2500	63.500 2.5000	63.500 2.5000	49.212 1.9375	525000 118000	825000 185000	1500	2000	12.6 27.8
48286/ **48220**	123.825 4.8750	182.562 7.1875	39.688 1.5625	38.100 1.5000	33.338 1.3125	224000 50500	435000 97500	1800	2400	3.52 7.76
48290/ **48220**	127.000 5.0000	182.562 7.1875	39.688 1.5625	38.100 1.5000	33.338 1.3125	224000 50500	435000 97500	1800	2400	3.33 7.34

Single Row (Inch)
127.000~158.750mm
5.0000~6.2500inch

Tapered Roller Bearings

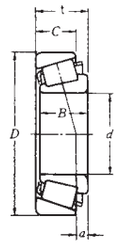

Bearing Number	Dimensions					Basic Load Ratings		Limiting Speeds		Weight
	mm inch					N lbf		rev/min		kg lb
	d	D	t	B	C	*Cr*	*Cor*	Grease	Oil	
67388/ **67322**	127.000 5.0000	196.850 7.7500	46.038 1.8125	46.038 1.8125	38.100 1.5000	310000 69500	550000 124000	1700	2200	5.10 11.2
74500/ **74850**	127.000 5.0000	215.900 8.5000	47.625 1.8750	47.625 1.8750	34.925 1.3750	320000 71500	540000 121000	1600	2100	7.05 15.5
97500/ **97900**	127.000 5.0000	228.600 9.0000	53.975 2.1250	49.428 1.9460	38.100 1.5000	320000 72000	445000 99500	1400	1900	8.43 18.6
HM926747/ **HM926710**	127.000 5.0000	228.600 9.0000	53.975 2.1250	49.428 1.9460	38.100 1.5000	430000 96500	620000 140000	1400	1900	8.83 19.5
95500/ **95905**	127.000 5.0000	230.000 9.0551	63.500 2.5000	63.500 2.5000	49.212 1.9375	525000 118000	825000 185000	1500	2000	12.9 28.4
95500/ **95925**	127.000 5.0000	234.950 9.2500	63.500 2.5000	63.500 2.5000	49.212 1.9375	525000 118000	825000 185000	1500	2000	12.0 26.5
HH228349/ **HH228310**	127.000 5.0000	254.000 10.0000	77.788 3.0625	82.550 3.2500	61.912 2.4375	740000 166000	1070000 241000	1400	1900	19.5 43.0
799/ **792**	128.588 5.0625	206.375 8.1250	47.625 1.8750	47.625 1.8750	34.925 1.3750	315000 70500	520000 116000	1700	2200	5.77 12.7
67389/ **67322**	130.175 5.1250	196.850 7.7500	46.038 1.8125	46.038 1.8125	38.100 1.5000	310000 69500	550000 124000	1700	2200	4.87 10.7
799A/ **792**	130.175 5.1250	206.375 8.1250	47.625 1.8750	47.625 1.8750	34.925 1.3750	315000 70500	520000 116000	1700	2200	5.65 12.5
L327249/ **L327210**	133.350 5.2500	177.008 6.9688	25.400 1.0000	26.195 1.0313	20.638 0.8125	126000 28400	259000 5800	1800	2400	1.70 3.75
48385/ **48320**	133.350 5.2500	190.500 7.5000	39.688 1.5625	39.688 1.5625	33.338 1.3125	236000 53000	475000 107000	1700	2300	3.64 8.03
67390/ **67322**	133.350 5.2500	196.850 7.7500	46.038 1.8125	46.038 1.8125	38.100 1.5000	310000 69500	550000 124000	1700	2200	4.63 10.2
67391/ **67322**	133.350 5.2500	196.850 7.7500	46.038 1.8125	46.038 1.8125	38.100 1.5000	310000 69500	550000 124000	1700	2200	4.59 10.1
74525/ **74850**	133.350 5.2500	215.900 8.5000	47.625 1.8750	47.625 1.8750	34.925 1.3750	320000 71500	540000 12100	1600	2100	6.56 14.5
95525/ **95925**	133.350 5.2500	234.950 9.2500	63.500 2.5000	63.500 2.5000	49.212 1.9375	525000 118000	825000 185000	1500	2000	11.3 24.9
95528/ **95925**	133.350 5.3750	234.950 9.2500	63.500 2.5000	63.500 2.5000	49.212 1.9375	525000 118000	825000 185000	1500	2000	11.4 25.1
48393/ **48320**	136.525 5.3750	190.500 7.5000	39.688 1.5625	39.688 1.5625	33.338 1.3125	236000 53000	475000 107000	1700	2300	3.43 7.59
896/ **892**	136.525 5.3750	228.600 9.0000	57.150 2.2500	57.150 2.2500	44.450 1.7500	445000 100000	735000 165000	1500	2000	9.07 20.0
74550/ **74845**	139.700 5.5000	214.975 8.4636	47.625 1.8750	47.625 1.8750	34.925 1.3750	320000 71500	540000 121000	1600	2100	5.97 13.2
74550/ **74850**	139.700 5.5000	215.900 8.5000	47.625 1.8750	47.625 1.8750	34.925 1.3750	320000 71500	540000 121000	1600	2100	6.05 13.3
898/ **892**	139.700 5.5000	228.600 98.0000	57.150 2.2500	57.150 2.2500	44.450 1.7500	445000 100000	735000 165000	1500	2000	8.76 19.3
898A/ **892**	139.700 5.5000	228.600 9.0000	57.150 2.2500	57.150 2.2500	44.450 1.7500	445000 100000	735000 165000	1500	2000	8.73 19.2
99550/ **99100**	139.700 5.5000	254.000 10.0000	66.675 2.6250	66.675 2.6250	47.625 1.8750	550000 124000	910000 204000	1400	1800	14.3 31.5
48684/ **48620**	142.875 5.6250	200.025 7.8750	41.275 1.6250	39.688 1.5625	34.130 1.3437	239000 53500	490000 110000	1600	2100	3.85 8.49
48685/ **48620**	142.875 5.6250	200.025 7.8750	41.275 1.6250	39.688 1.5625	34.130 1.3437	239000 53500	490000 110000	1600	2100	3.89 8.58
36690/ **36620**	146.050 5.7500	193.675 7.6250	28.575 1.1250	28.575 1.1250	23.020 0.9063	165000 37000	340000 77000	1600	2200	2.27 5.00
36691/ **36620**	146.050 5.7500	193.675 7.6250	28.575 1.1250	28.575 1.1250	23.020 0.9063	165000 37000	340000 77000	1600	2200	2.25 4.96
99575/ **99100**	146.050 5.7500	254.000 10.0000	66.675 2.6250	66.675 2.6250	47.625 1.8750	550000 124000	910000 204000	1400	1800	13.5 29.8
L630349/ **L630310**	152.400 6.0000	192.088 7.5625	25.000 0.9843	24.000 0.9449	19.000 0.7480	130000 29200	261000 59000	1600	2100	1.53 3.37
M231648/ **M231610**	152.400 6.0000	222.250 8.7500	46.830 1.8437	46.830 1.8437	34.925 1.3750	315000 71000	585000 132000	1500	2000	5.72 12.6
M231649/ **M231610**	152.400 6.0000	222.250 8.7500	46.830 1.8437	46.830 1.8437	34.925 1.3750	315000 71000	585000 132000	1500	2000	5.77 12.7
L432349/ **L432310**	158.750 6.2500	205.583 8.0938	23.812 0.9375	23.812 0.9375	18.258 0.7188	126000 28300	247000 55500	1500	2000	1.89 4.17

FBJ®

Spherical Roller Bearings

21000 Series

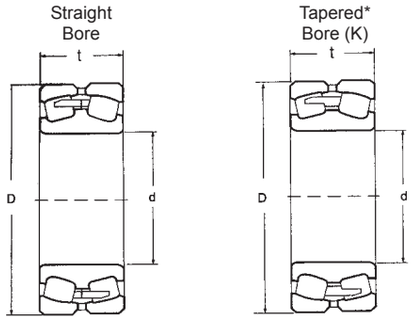

Bearing Number	Dimensions (mm)			Basic Load Ratings (kN)		Limiting Speeds (rev/min)		Weight kg
	Bore d	OD D	Thickness t	*Cr*	*Cor*	Grease	Oil	
21305	25	62	17	44.9	43.7	5600	7400	0.267
21306	30	72	19	58.3	60	4700	6300	0.406
21307	35	80	21	70.7	73.3	4200	5600	0.547
21308	40	90	23	87.6	92	3700	5000	0.751
21309	45	100	25	105	112	3300	4400	1.01
21310	50	110	27	121	129	3000	4000	1.3
21311	55	120	29	141	152	2800	3700	1.66
21312	60	130	31	165	175	2500	3400	1.99
21313	65	140	33	186	197	2300	3100	2.45
21314	70	150	35	206	223	2200	2900	2.98
21315	75	160	37	249	270	2100	2700	3.63
21316	80	170	39	272	306	1900	2600	4.29
21317	85	180	41	297	351	1800	2400	5.19
21318	90	190	43	320	387	1700	2300	6.09
21319	95	200	45	351	444	1700	2200	7.09
21320	100	215	47	382	446	1600	2000	8.44
21322	110	240	50	471	611	1400	1800	11.8

* For tapered bore bearings add suffix “K”

* Add Suffix ‘CC’ or ‘CA’ or ‘MB’ for respective cage type

22200 Series

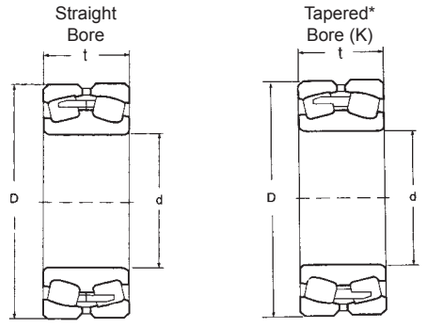

Spherical Roller Bearings

Bearing Number	Dimensions (mm)			Basic Load Ratings (kN)		Limiting Speeds (rev/min)		Weight kg
	Bore d	OD D	Thickness t	*Cr*	*Cor*	Grease	Oil	
22205	25	52	18	42.1	43.5	8100	11000	0.786
22206	30	62	20	51.7	55	6800	9100	0.287
22207	35	72	23	67	73.9	5900	7800	0.432
22208	40	80	23	76.9	85	5200	6900	0.555
22209	45	85	23	80.5	91.9	4900	6500	0.590
22210	50	90	23	83.1	97.8	4500	6000	0.692
22211	55	100	25	102	119	4100	5400	0.860
22212	60	110	28	127	154	3700	4900	1.198
22213	65	120	31	151	188	3400	4600	1.551
22214	70	125	31	155	193	3200	4300	1.660
22215	75	130	31	161	204	3100	4100	1.730
22216	80	140	33	174	225	2900	3800	2.280
22217	85	150	36	216	277	2700	3600	2.830
22218	90	160	40	252	332	2500	3300	4.010
22219	95	170	43	273	359	2400	3200	4.550
22220	100	180	46	317	423	2200	3000	5.124
22222	110	200	53	414	574	2000	2700	7.000
22224	120	215	58	488	666	1900	2500	9.070
22226	130	230	64	579	804	1800	2300	11.370
22228	140	250	68	656	920	1600	2200	14.200
22230	150	270	73	750	1060	1500	2000	18.420
22232	160	290	80	879	1220	1400	1900	23.500
22234	170	310	86	983	1380	1300	1800	28.800
22236	180	320	86	1040	1490	1300	1700	30.900
22238	190	340	92	1150	1700	1200	1600	37.410
22240	200	360	98	1290	1910	1100	1500	43.900
22244	220	400	108	1560.00	2260.00	1000	1400	59.500

* For tapered bore bearings add suffix “K”

* Add Suffix ‘CC’ or ‘CA’ or ‘MB’ for respective cage type

FBJ®

Spherical Roller Bearings

22300 Series

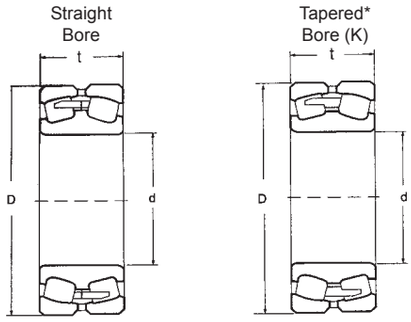

Bearing Number	Dimensions (mm)			Basic Load Ratings (kN)		Limiting Speeds (rev/min)		Weight kg
	Bore d	OD D	Thickness t	*Cr*	*Cor*	Grease	Oil	
22308	40	90	33	115	127	4000	5300	1.041
22309	45	100	36	146	168	3600	4800	1.387
22310	50	110	40	181	208	3200	4300	1.827
22311	55	120	43	213	248	3000	3900	2.299
22312	60	130	46	243	284	2700	3600	2.881
22313	65	140	48	251	291	2500	3400	3.494
22314	70	150	51	300	362	2400	3100	4.212
22315	75	160	55	351	437	2200	2900	5.225
22316	80	170	58	395	496	2100	2800	6.296
22317	85	180	60	431	539	2000	2600	7.360
22318	90	190	64	486	628	1900	2500	8.878
22139	95	200	67	534	686	1800	2300	10.380
22320	100	215	73	613	799	1600	2200	12.941
22322	110	240	80	724	915	1500	2000	17.850
22324	120	260	86	848	1130	1400	1800	22.378
22326	130	280	93	978	1320	1300	1700	28.130
22328	140	300	102	1140	1550	1200	1600	34.840
22330	150	320	108	1270	1750	1100	1500	43.600
22332	160	340	114	1350	1860	1000	1400	51.900
22334	170	360	120	1500	2090	980	1300	60.750
22336	180	380	126	1640	2290	930	1200	60.080
22338	190	400	132	1810	2540	880	1200	83.220
22340	200	420	138	1990	2800	840	1100	95.2
22344	220	460	145	2290	3250	760	1000	121

* For tapered bore bearings add suffix “K”

* Add Suffix ‘CC’ or ‘CA’ or ‘MB’ for respective cage type

23000 Series

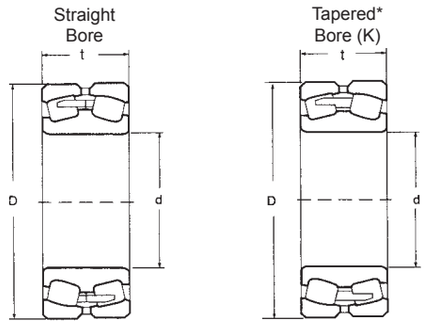

Spherical Roller Bearings

Bearing Number	Dimensions (mm)			Basic Load Ratings (kN)		Limiting Speeds (rev/min)		Weight kg
	Bore d	OD D	Thickness t	*Cr*	*Cor*	Grease	Oil	
23022	110	170	45	304	489	1900	2500	3.96
23024	120	180	46	317	514	1700	2300	4.35
23026	130	200	52	401	660	1600	2100	6.17
23028	140	210	53	415	689	1500	2000	6.87
23030	150	225	56	467	789	1400	1900	8.25
23032	160	240	60	538	917	1300	1700	10.2
23034	170	260	67	652	1110	1200	1600	13.4
23036	180	280	74	702	1170	1100	1500	17.6
23038	190	290	75	781	1360	1100	1400	18.8
23040	200	310	82	867	1470	1000	1400	24.10
23044	220	340	90	1030	1790	930	1200	31

* For tapered bore bearings add suffix “K”
* Add Suffix ‘CC’ or ‘CA’ or ‘MB’ for respective cage type

23100 Series

Spherical Roller Bearings

23120	100	165	52	326	490	1700	2200	4.58
23122	110	180	56	382	596	1500	2000	5.76
23124	120	200	62	468	726	1400	1900	8.33
23126	130	210	64	512	798	1300	1800	8.75
23128	140	225	68	546	876	1200	1600	10.80
23130	150	250	80	716	1150	1100	1500	16.2
23132	160	270	86	841	1370	1000	1400	20.8
23134	170	280	88	887	1490	990	1300	22.2
23136	180	300	96	999	1650	930	1200	28.40
23138	190	320	104	1170	1960	870	1200	34.9
23140	200	340	112	1370	2310	830	1100	43.70
23144	220	370	120	1500	2570	760	1000	54.80

* For tapered bore bearings add suffix “K”
* Add Suffix ‘CC’ or ‘CA’ or ‘MB’ for respective cage type

FBJ®

Spherical Roller Bearings 23200~23300 Series

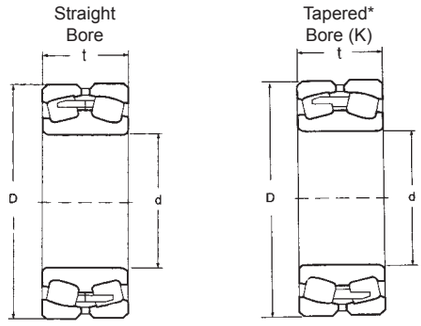

Bearing Number	Dimensions (mm)			Basic Load Ratings (kN)		Limiting Speeds (rev/min)		Weight kg
	Bore d	OD D	Thickness t	*Cr*	*Cor*	Grease	Oil	
23218	90	160	52.4	316	453	1600	2200	4.64
23220	100	180	60.3	405	589	1500	1900	6.81
23222	110	200	69.8	428	786	1300	1800	9.79
23224	120	215	76	592	904	1200	1600	12.1
23226	130	230	80	670	1020	1100	1500	14.3
23228	140	250	88	818	1230	1000	1400	18.9
23230	150	270	96	925	1450	980	1300	24.3
23232	160	290	104	1050	1670	910	1200	30.6
23234	170	310	110	1230	1970	840	1100	37.4
23236	180	320	112	1270	2050	820	1100	39.5
23238	190	340	120	1420	2340	760	1000	48
23240	200	360	128	1580	2620	730	970	57.8
23244	220	400	144	1960	3270	660	880	81.5
23328	140	300	118	1260	1790	1000	1400	39.6

* For tapered bore bearings add suffix “K”

* Add Suffix ‘CC’ or ‘CA’ or ‘MB’ for respective cage type

Spherical Roller Bearings 23900 Series

23920	100	140	30	173	278	2600	3500	1.39
23922	110	150	30	182	303	2400	3300	1.5
23924	120	165	34	226	383	2200	3000	2.12
23926	130	180	37	270	455	2000	2700	2.76
23928	140	190	37	280	490	1900	2600	2.95
23930	150	210	45	321	569	1800	2300	4.88
23932	160	220	45	334	611	1700	2200	5.16
23934	170	230	45	339	633	1600	2100	5.4
23936	180	250	52	447	849	1500	2000	7.98
23938	190	260	52	466	871	1400	1900	8.25
23940	200	280	60	537	1030	1300	1800	11.7
23944	220	300	60	578	1120	1200	1600	12.6

* For tapered bore bearings add suffix “K”

* Add Suffix ‘CC’ or ‘CA’ or ‘MB’ for respective cage type

24000 Series

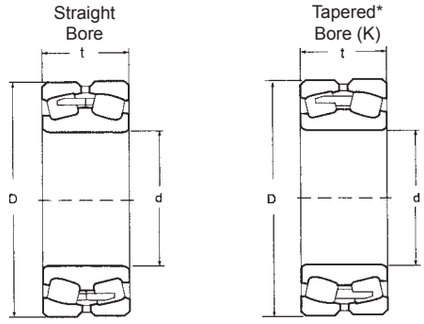

Spherical Roller Bearings

Bearing Number	Dimensions (mm)			Basic Load Ratings (kN)		Limiting Speeds (rev/min)		Weight kg
	Bore d	OD D	Thickness t	*Cr*	*Cor*	Grease	Oil	
24018	90	140	50	229	386	1600	2200	2.89
24020	100	150	50	242	425	1500	2000	3.15
24022	110	170	60	294	506	1300	1800	5.04
24024	120	180	60	386	673	1200	1700	5.4
24026	130	200	69	484	841	1100	1500	8.16
24028	140	210	69	495	865	1100	1400	8.42
24030	150	225	75	564	1010	990	1300	10.5
24032	160	240	80	655	1180	930	1200	13
24034	170	260	90	800	1470	860	1200	17.6
24036	180	280	100	936	1710	810	1100	23.5
24038	190	290	100	931	1800	780	1000	23.8
24040	200	310	109	1170	2170	730	970	31.4
24044	220	340	118	1370	2550	660	880	40.5

* For tapered bore bearings add suffix “K”
* Add Suffix ‘CC’ or ‘CA’ or ‘MB’ for respective cage type

24100 Series

Spherical Roller Bearings

24118	90	150	60	326	524	1400	1900	4.26
24120	100	165	65	389	632	1300	1700	5.54
24122	110	180	69	462	758	1200	1500	7.15
24124	120	200	80	601	994	1100	1400	10.2
24126	130	210	80	597	1020	980	1300	11.1
24128	140	225	85	634	1100	920	1200	13.1
24130	150	250	100	891	1520	840	1100	20.2
24132	160	270	109	1050	1810	780	1000	26.1
24134	170	280	109	1080	1870	740	990	27.2
24136	180	300	118	1240	2180	700	930	33.5
24138	190	320	128	1330	2340	650	870	42.3
24140	200	340	140	1590	2790	620	830	53.3
24144	220	370	150	1870	3390	570	750	65.6

* For tapered bore bearings add suffix “K”
* Add Suffix ‘CC’ or ‘CA’ or ‘MB’ for respective cage type

FBJ®

Spherical Roller Thrust Bearings

29300 Series

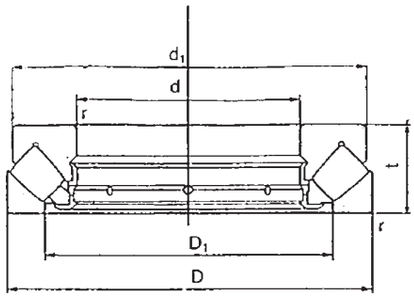

Bearing Number	Dimensions (mm)						Basic Load Ratings (N)		Limiting Speeds (rev/min) Oil	Weight kg
	d	D	t	d_1	D_1	r (min)	*Cr*	*Cor*		
29317M	85	150	39	134.0	110.5	1.5	345000	1060000	3400	2.53
29318M	90	155	39	135.2	116.0	1.5	355000	1100000	3400	2.64
29320M	100	170	42	146.9	126.0	1.5	415000	1370000	3000	3.37
29322M	110	190	48	165.1	140.6	2.0	530000	1700000	2600	5.03
29324M	120	210	54	184.5	155.0	2.1	640000	2080000	2400	6.89
29326M	130	225	58	205.0	169.0	2.1	720000	2360000	2200	8.48
29328M	140	240	60	220.0	181.0	2.1	800000	2700000	2100	9.86
29330M	150	250	60	230.0	192.0	2.1	815000	2850000	2000	10.48

Spherical Roller Thrust Bearings

29400 Series

Bearing Number	Dimensions (mm)						Basic Load Ratings (N)		Limiting Speeds (rev/min) Oil	Weight kg
	d	D	t	d_1	D_1	r (min)	*Cr*	*Cor*		
29412M	60	130	42	113.0	87.0	1.5	283000	805000	2600	2.78
29413M	65	140	45	123.0	93.5	2.0	330000	945000	2400	3.44
29414M	70	150	48	128.3	98.4	2.0	365000	1040000	2200	4.19
29415M	75	160	51	140.0	105.6	2.0	415000	1190000	2100	5.07
29416M	80	170	54	149.0	113.0	2.1	460000	1380000	1900	6.09
29417M	85	180	58	158.2	120.5	2.1	490000	1480000	1800	7.20
29418M	90	190	60	162.0	127.0	2.1	545000	1680000	1700	8.38
29420M	100	210	67	181.0	139.0	3.0	685000	2130000	1500	11.50
29422M	110	230	73	199.6	153.4	3.0	845000	2620000	1400	15.00
9424M	120	250	78	218.0	166.5	4.0	975000	3050000	1350	18.60
29426M	130	270	85	236.4	181.0	4.0	1080000	3550000	1250	23.70
29428M	140	280	85	246.0	196.0	4.0	1110000	3750000	1200	25.20
29430M	150	300	90	270.0	211.0	4.0	1400000	4700000	1170	27.00

NK Series

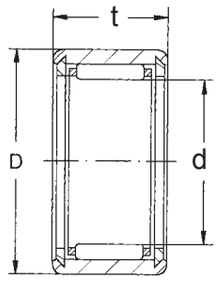

NK(Fw ≤ 10mm)

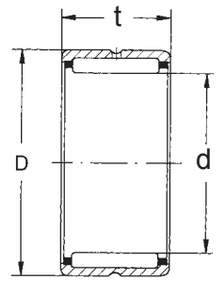

NK

Needle Roller Bearings

Shaft Diameter (mm)	Bearing Number	Dimensions(mm)			Basic Load Ratings(N)		Limiting Speeds(rpm)		Weight (g)
		d	D	t	Dynamic	Static	Grease	Oil	
10	NK10/12	10	17	12	4500	5100	19000	28000	10
	NK10/16	10	17	16	5450	6400	19000	28000	13
12	NK12/12	12	19	12	5000	6100	17000	26000	13
	NK12/16	12	19	16	6000	7700	17000	26000	16
	NKS12 TN	12	22	16	9600	10400	17000	26000	23
14	NK14/16	14	22	16	10300	11500	16000	24000	21
	NK14/20	14	22	20	13000	15600	16000	24000	26
	NKS14	14	25	16	14000	15000	16000	23000	29
15	NK15/16	15	23	16	10900	12700	15000	23000	22
	NK15/20	15	23	20	13000	17000	15000	23000	27
	NKS15	15	26	16	14400	15000	15000	23000	30
16	NK16/16	16	24	16	11000	14000	15000	23000	22
	NK16/20	16	24	20	14000	18000	15000	23000	28
	NKS16	16	28	16	15000	16000	14000	22000	35
17	NK17/16	17	25	16	12000	15000	15000	22000	24
	NK17/20	17	25	20	15000	20000	15000	21000	30
18	NK18/16	18	26	16	12500	16200	14000	21000	25
	NK18/20	18	26	20	15800	22000	14000	21000	31
	NKS18	18	30	16	16000	17000	13000	20000	37.9
19	NK19/16	19	27	16	13000	17400	14000	21000	26
	NK19/20	19	27	20	16000	22000	14000	21000	32
20	NK20/16	20	28	16	13000	17000	13000	20000	27
	NK20/20	20	28	20	16000	23000	13000	20000	34
22	NK22/16	22	30	16	14000	19000	12000	18000	30
	NK22/20	22	30	20	17000	27000	12000	18000	37
	NK22/20K	22	31	20	17700	27000	12000	18000	37.6
24	NK24/16	24	32	16	15000	22000	11000	17000	32
	NK24/20	24	32	20	18000	28000	11000	17000	40
25	NK25/16	25	33	16	15000	22000	11000	16000	33
	NK25/20	25	33	20	19000	30000	11000	16000	42
26	NK26/16	26	34	16	15000	23000	10000	15000	34
	NK26/20	26	34	20	19100	30000	10000	15000	42
28	NK28/20	28	37	20	22000	34000	9500	14000	52
	NK28/30	28	37	30	33000	57000	9500	14000	82
29	NK29/20	29	38	20	21900	34000	8500	14000	54
	NK29/30	29	38	30	27000	55000	8500	14000	84
30	NK30/20	30	40	20	22000	34000	8500	13000	65
	NK30/30	30	40	30	33000	57000	8500	13000	98
	NK30/17K	30	50	17	25000	32000	8500	13000	66
32	NK32/20	32	42	20	23500	37000	8500	13000	68
	NK32/30	32	42	30	34000	63000	8500	13000	102
35	NK35/20	35	45	20	24000	41500	7500	11000	74
	NK35/30	35	45	30	36000	69000	7500	11000	112
37	NK37/20	37	47	20	25000	43500	7500	11000	77
	NK37/30	37	47	30	37000	69500	7500	11000	113
38	NK38/20	38	48	20	25500	45000	7500	11000	79
	NK38/30	38	48	30	37500	73000	7500	11000	107
40	NK40/20	40	50	20	36000	47000	6500	10000	63
	NK40/30	40	50	30	39000	79000	6500	10000	125
42	NK42/20	42	52	20	26900	49000	6500	9500	86
	NK42/30	42	52	30	39000	79000	6500	9500	130
43	NK43/20	43	53	20	27500	50000	6500	9500	86
	NK43/30	43	53	30	40000	80000	6500	9500	133

FBJ®

Needle Roller Bearings

NK Series

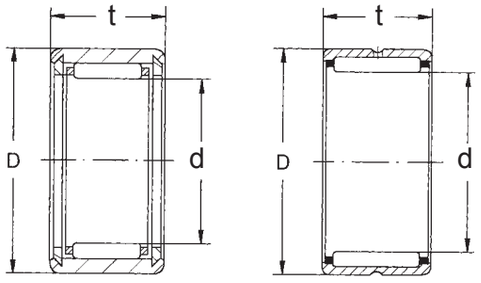

NK(Fw ⩽ 10mm) NK

Shaft Diameter (mm)	Bearing Number	Dimensions(mm)			Basic Load Ratings(N)		Limiting Speeds(rpm)		Weight (g)
		d	D	t	Dynamic	Static	Grease	Oil	
45	NK45/20	45	55	20	27500	53000	6000	9000	91
	NK45/30	45	55	30	41000	88000	6000	9000	139
50	NK50/25	50	62	25	38000	74000	5500	8000	158
	NK50/35	50	62	35	50000	106000	5500	8000	221
55	NK55/25	55	68	25	41000	82000	5000	7500	193
	NK55/35	55	68	35	54000	118000	5000	7500	267
60	NK60/25	60	72	25	41000	85000	4300	6500	185
	NK60/35	60	72	35	57000	130000	4300	6500	258
65	NK65/25	65	78	25	44000	98000	4000	6000	221
	NK65/35	65	78	35	59000	140000	4000	6000	310
68	NK68/25	68	82	25	44500	89000	4000	6000	241
	NK68/35	68	82	35	63000	139000	4000	6000	338
70	NK70/25	70	85	25	45000	91500	3700	5500	275
	NK70/35	70	85	35	64000	144000	3700	5500	386
75	NK75/25	75	92	25	54000	104000	3700	5500	315
	NK75/35	75	92	35	77000	160000	3700	5500	492
80	NK80/25	80	95	25	56000	119000	3300	5000	301
	NK80/35	80	95	35	79000	184000	3300	5000	425
85	NK85/25	85	105	25	70500	123000	3100	4700	404
	NK85/35	85	105	35	100000	193000	3100	4700	517
90	NK90/25	90	110	25	72000	128000	2900	4400	426
	NK90/35	90	110	35	103000	208000	2900	4400	604
95	NK95/26	95	115	26	74500	137000	2800	4200	364
	NK95/36	95	115	36	108000	223000	2800	4200	652
100	NK100/26	100	120	26	73000	137000	2700	4000	487
	NK100/36	100	120	36	107000	223000	2700	4000	679
105	NK105/26	105	125	26	76500	147000	2500	3800	506
	NK105/36	105	125	36	111000	238000	2500	3800	713
110	NK110/30	110	130	30	97500	204000	2400	3600	612
	NK110/40	110	130	40	129000	292000	2400	3600	830
120	NK120/40	120	140	40	113000	268000	2200	3300	910
130	NK130/40	130	150	40	116000	283000	2100	3100	980
145	NK145/32	145	170	32	111000	238000	1900	2700	1120
	NK145/42	145	170	42	153000	360000	1900	2700	1490

HK Series

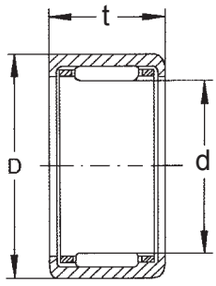

HK

Drawn Cup Needle Roller Bearings

Shaft Diameter (mm)	Bearing Number	Dimensions(mm)			Basic Load Ratings(N)		Limiting Speeds(rpm)		Weight (g)
		d	D	t	Dynamic	Static	Grease	Oil	
4	HK0408TN	4	8	8	1540	1070	24000	40000	1.6
5	HK0509TN	5	9	9	2200	1790	22000	36000	2
6	HK0608	6	10	8	1830	1550	20000	32000	2.1
	HK0609	6	10	9	2650	2400	18000	30000	2.2
7	HK0709	7	11	9	2800	2150	16000	27000	2.3
8	HK0808	8	12	8	2550	2400	13000	21000	2.7
	HK0814	8	12	10	3700	3450	13000	21000	3
9	HK0908	9	13	8	3650	4050	15000	25000	3
	HK0910	9	13	10	4050	4250	15000	25000	4
	HK0912	9	13	12	5000	6000	15000	25000	4.6
10	HK1010	10	14	10	3900	4800	11500	19000	4.1
	HK1012	10	14	12	5000	6300	11500	19000	4.8
	HK1015	10	14	15	6700	7800	11500	19000	6
12	HK1210	12	16	10	4150	5800	11500	19000	4.6
	HK1212	12	18	12	3800	5100	9000	15000	5.6
13	HK1312	13	19	12	6200	7100	11000	17000	8.9
14	HK1412	14	20	12	7800	7500	9600	16000	10.5
15	HK1512	15	21	12	7000	8400	8400	14000	11.1
	HK1516	15	21	16	9800	11400	8400	14000	15
	HK1522	15	21	22	10400	16500	8400	14000	20.4
16	HK1612	16	22	12	7100	9200	8400	14000	11.7
	HK1616	16	22	16	10100	14300	8400	14000	15.8
	HK1622	16	22	22	11100	17400	8400	14000	21.7
17	HK1712	17	23	12	6900	9300	7800	13000	12.2
	HK1714	17	23	14	6800	10200	6000	10000	14
	HK1718	17	23	18	9500	10600	6000	10000	19
18	HK1812	18	24	12	7100	9900	7200	12000	13.1
	HK1816	18	24	16	106500	15300	7200	12000	17.5
20	HK2010	20	26	10	5900	7200	6000	10000	11.8
	HK2012	20	26	12	7600	10100	6000	10000	14.1
	HK2014	20	26	14	9700	18100	5400	9000	15.7
	HK2016	20	26	16	11700	29100	6000	10000	19.3
	HK2018	20	26	18	7900	12800	5400	9000	23.3
	HK2020	20	26	20	13700	24000	6000	10000	24.1
	HK2025	20	26	25	9100	14800	6000	9900	28
	HK2030	20	26	30	21800	40000	6100	10100	34.7

FBJ®

Drawn Cup Needle Roller Bearings

HK Series

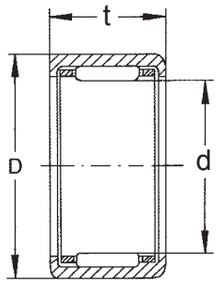

HK

Shaft Diameter (mm)	Bearing Number	Dimensions(mm)			Basic Load Ratings(N)		Limiting Speeds(rpm)		Weight (g)
		d	D	t	Dynamic	Static	Grease	Oil	
22	HK2210	22	28	10	7200	9500	6000	10010	12.3
	HK2212	22	28	12	8100	10400	6000	10010	15
	HK2216	22	28	16	11400	18100	6000	10010	20.9
	HK2220	22	28	20	14500	25000	6000	10010	26.2
25	HK2512	25	32	12	10000	14200	5400	9000	22
	HK2514	25	32	14	13600	18700	5400	9000	21.9
	HK2516	25	32	16	13600	20000	5400	9000	27.2
	HK2518	25	32	18	17500	25800	5400	9000	28.2
	HK2520	25	32	20	17900	30000	5400	9000	34.1
	HK2525	25	32	25	22200	36700	5400	9000	40
	HK2526	25	32	26	22500	42000	5400	9000	44.8
	HK2538	25	32	38	30000	58000	5400	9000	64.7
28	HK2816	28	35	16	15400	22500	5220	8700	30.1
	HK2818	28	35	18	18500	29300	5220	8700	31.7
	HK2820	28	35	20	18900	32000	5220	8700	37.6
30	HK3012	30	37	12	10100	16200	4850	8100	24
	HK3016	30	37	16	15200	27000	4850	8100	32
	HK3018	30	37	18	19200	31500	4850	8100	33.6
	HK3020	30	37	20	19700	33500	4850	8100	40.1
	HK3026	30	37	26	24000	50000	4850	8100	52.9
	HK3038	30	37	38	32500	74000	4850	8100	76.1
32	HK3224	32	38	24	25500	52000	4300	7300	50.7
	HK3232	32	39	32	22600	54300	4300	7100	66.4
35	HK3512	35	42	12	12100	19300	4300	7100	27.2
	HK3516	35	42	16	15700	27500	4300	7100	36.9
	HK3520	35	42	20	20800	41000	4300	7100	46.1
40	HK4012	40	47	12	14000	24300	3800	6300	31.1
	HK4016	40	47	16	20000	38500	3800	6300	41.1
	HK4020	40	47	20	25500	52000	3800	6300	51.8
45	HK4512	45	52	12	12900	22500	3500	5800	34.8
	HK4516	45	52	16	19300	38000	3500	5800	50
	HK4520	45	52	20	22000	51000	3500	5800	56
50	HK5020	50	58	20	28000	60000	3500	5300	72
	HK5025	50	58	25	29500	80000	3500	5300	90
55	HK5520	55	63	20	33200	60000	2700	4500	107
	HK5528	55	63	28	39100	98000	2700	4500	111
60	HK6012	60	68	12	12400	29000	2400	4000	49.2
	HK6020	60	68	20	30500	72000	2400	4000	86
	HK6032	60	68	32	50000	131000	2400	4000	134

NKI Series

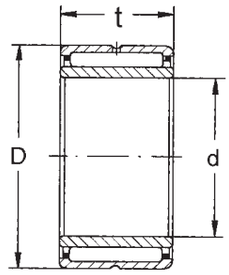

NKI

Needle Roller Bearings With Inner Ring

Shaft Diameter (mm)	Bearing Number	Dimensions(mm)			Basic Load Ratings(N)		Limiting Speeds(rpm)		Weight (g)
		d	D	t	Dynamic	Static	Grease	Oil	
10	NKI 10/16	10	22	16	10000	11500	16000	24000	29.4
12	NKI 12/16	12	24	16	12000	13900	15000	23000	33
	NKI 12/20	12	24	20	14600	18800	15000	23000	42
15	NKI 15/16	15	27	16	13000	17000	14000	21000	38.8
	NKI 15/20	15	27	20	16000	22000	14000	21000	48.7
17	NKI 17/16	17	29	16	13700	18700	13000	19000	42
	NKI 17/20	17	29	20	17100	25500	13000	19000	53
20	NKI 20/16	20	32	16	15200	22300	11000	17000	49
	NKI 20/20	20	32	20	19500	30500	11000	17000	61
22	NKI 22/16	22	34	16	15600	23000	10000	15000	52
	NKI 22/20	22	34	20	19000	30000	10000	15000	65.4
25	NKI 25/20	25	38	20	22000	34000	9500	14000	79.4
	NKI 25/30	25	38	30	32500	57000	9500	14000	124
28	NKI 28/20	28	42	20	23000	37000	8500	13000	96
	NKI 28/30	28	42	30	34000	63000	8500	13000	146
30	NKI 30/20	30	45	20	24800	41500	7500	12000	112
	NKI 30/30	30	45	30	36000	66500	7500	12000	170
32	NKI 32/20	32	47	20	25000	43000	7500	11000	118
	NKI 32/30	32	47	30	36000	69500	7500	11000	180
35	NKI 35/20	35	50	20	26000	47000	6500	11000	127
	NKI 35/30	35	50	30	38000	76000	65000	10000	193
38	NKI 38/20	38	53	20	27500	51000	6500	9500	136
	NKI 38/30	38	53	30	40000	82000	6500	9500	207
40	NKI 40/20	40	55	20	28000	52000	6000	9000	142
	NKI 40/30	40	55	30	41000	85000	6000	9000	216
42	NKI 42/20	42	57	20	28800	55500	5500	9500	148
	NKI 42/30	42	57	30	42500	91500	5500	9500	222
45	NKI 45/25	45	62	25	38500	74500	5500	8500	229
	NKI 42/35	45	62	35	51000	106000	5500	8500	322
50	NKI 50/25	50	68	25	40000	82000	5000	7500	270
	NKI 50/35	50	68	35	54000	118000	5000	7500	379
55	NKI 55/25	55	72	25	41000	85000	4300	7500	271
	NKI 55/35	55	72	35	57000	130000	4300	7500	379
60	NKI 60/25	60	82	25	44500	89000	4000	7000	394
	NKI 60/35	60	82	35	63000	139000	4000	7000	553
65	NKI 65/25	65	90	25	54000	100000	3700	6500	467
	NKI 65/35	65	90	35	76000	156000	3700	6500	659
70	NKI 70/25	70	95	25	57000	119000	3300	6000	521
	NKI 70/35	70	95	35	79000	184000	3300	6000	737
75	NKI 75/25	75	105	25	71000	123000	3100	5000	641
	NKI 75/35	75	105	35	100000	193000	3100	5000	908
80	NKI 80/25	80	110	25	71000	128000	2900	4700	677
	NKI 80/35	80	110	35	104000	208000	2900	4700	959
85	NKI 85/26	85	115	26	74500	137000	2800	4500	743
	NKI 85/36	85	115	36	108000	223000	2800	4500	1040
90	NKI 90/26	90	120	26	73000	137000	2700	4400	778
	NKI 90/36	90	120	36	107000	223000	2700	4400	1090
95	NKI 95/26	95	125	26	76500	147000	2500	4000	816
	NKI 95/36	95	125	36	111000	238000	2500	4000	1145
100	NKI 100/30	100	130	30	97500	204000	2400	4000	990
	NKI 100/40	100	130	40	129000	290000	2400	4000	1330
110	NKI 110/44	110	150	40	131000	290000	2100	3700	2070

FBJ®

Radial Needle Roller and Cage Assemblies

K Series

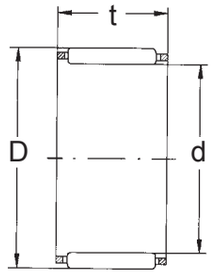

K

Shaft Diameter (mm)	Bearing Number	Dimensions(mm)			Basic Load Ratings(N)		Limiting Speeds(rpm)		Weight (g)
		d	D	t	Dynamic	Static	Grease	Oil	
8	K8X11X8	8	11	8	3150	3000	21000	32000	1.1
	K8X11X10	8	11	10	4000	4100	21000	32000	1.3
	K8X11X13	8	11	13	4850	5200	21000	32000	2,6
	K8X12X10	8	12	10	4650	4150	21000	32000	2.0
	K8X12X12	8	12	12	5600	5300	21000	32000	3.4
	K8X12X13	8	12	13	5600	5300	21000	32000	3.6
9	K9X12X10	9	12	10	4550	5000	20000	30000	1.5
	K9X12X13	9	12	13	5500	6400	20000	30000	2.1
10	K10X13X10	10	13	10	4550	5100	19000	28000	1.6
	K10X13X13	10	13	13	5450	6450	19000	28000	3.1
	K10X14X10	10	14	10	5500	5450	19000	28000	3.4
	K10X14X8	10	14	8	4300	3950	19000	28000	2.7
	K10X14X13	10	14	13	6600	6900	19000	28000	4.4
	K10X16X12	10	16	12	7100	5950	19000	28000	6.6
11	K11X14X10	11	14	10	5000	6000	18000	27000	2.8
12	K12X15X9	12	15	9	4450	5250	17000	26000	2.7
	K12X15X10	12	15	10	5000	6100	17000	26000	3.3
	K12X15X12	12	15	12	6000	7700	17000	26000	3.8
	K12X15X20	12	15	20	8500	1200	17000	26000	5.9
	K12X16X13	12	16	13	7500	8500	17000	26000	5.5
	K12X17X13	12	17	13	9000	9400	17000	26000	7.5
	K12X18X12	12	18	12	8600	8000	17000	26000	8.4
14	K14X17X10	14	17	10	5400	7000	16000	24000	K14
	K14X18X13	14	18	13	8300	10000	16000	24000	6.3
	K14X18X15	14	18	15	9600	12000	16000	24000	7.6
	K14X18X17	14	18	17	10900	14400	16000	24000	8.1
	K14X19X13	14	19	13	8950	9650	16000	24000	8
	K14X20X12	14	20	12	9350	9150	16000	24000	9.5
	K14X20X17	14	20	17	13500	14600	16000	24000	14
15	K15X18X14	15	18	14	7850	11600	15000	23000	6
	K15X19X17	15	19	17	10900	14600	15000	23000	9
	K15X20X13	15	20	13	10100	11500	15000	23000	8.8
	K15X21X17	15	21	17	15100	17200	15000	23000	14
	K15X21X21	15	21	21	16500	19100	15000	23000	17
16	K16X20X13	16	20	13	9000	11800	15000	23000	7.1
	K16X20X17	16	20	17	11900	16800	15000	23000	9.2
	K16X22X13	16	22	13	12600	13900	15000	23000	11
	K16X22X16	16	22	16	14200	16000	15000	23000	14
	K16X22X20	16	22	20	16000	18800	15000	23000	17
17	K17X21X13	17	21	13	9400	12600	15000	22000	7.5
	K17X21X17	17	21	17	11800	16900	15000	22000	9.5
	K17X22X20	17	22	20	14700	19200	15000	22000	15
	K17X23X17	17	23	17	14000	16000	15000	22000	16
18	K18X22X13	18	22	13	8900	11900	14000	21000	7.7
	K18X22X17	18	22	17	11700	17000	14000	21000	11
	K18X23X20	18	23	20	14600	19000	14000	21000	15
	K18X24X13	18	24	13	11600	12800	14000	21000	13
	K18X24X20	18	24	20	17000	20900	14000	21000	19
	K18X25X17	18	25	17	18000	20400	14000	21000	19
	K18X25X20	18	25	20	22000	26600	14000	21000	24
19	K19X23X13	19	23	13	9600	13500	14000	21000	8.2
	K19X23X17	19	23	17	12700	19200	14000	21000	11

K Series

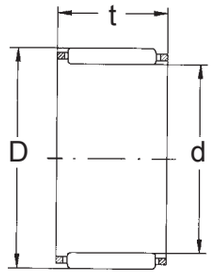

K

Radial Needle Roller and Cage Assemblies

Shaft Diameter (mm)	Bearing Number	Dimensions(mm)			Basic Load Ratings(N)		Limiting Speeds(rpm)		Weight (g)
		d	D	t	Dynamic	Static	Grease	Oil	
20	K20X24X10	20	24	10	8300	11200	13000	20000	6.5
	K20X24X17	20	24	17	13200	20400	13000	20000	11
	K20X26X13	20	26	13	14000	16700	13000	20000	12
	K20X26X20	20	26	20	20600	27600	13000	20000	19
	K20X28X25	20	28	25	27000	32500	13000	20000	37
21	K21X25X13	21	25	13	10300	15000	13000	19000	9
	K21X25X17	21	25	17	13600	21500	13000	19000	12
22	K22X26X17	22	26	17	13500	21600	12000	18000	12
	K22X28X17	22	28	17	17700	23000	12000	18000	20
	K22X29X16	22	29	16	18700	22700	12000	18000	22
	K22X30X15	22	30	15	19300	21700	12000	18000	22
24	K24X28X13	24	28	13	10800	16800	11000	17000	10
	K24X28X17	24	28	17	14300	23900	11000	17000	13
	K24X29X13	24	29	13	12300	16900	11000	17000	12
	K24X30X17	24	30	17	18400	25000	11000	17000	22
25	K25X29X17	25	29	17	14200	24000	11000	16000	14
	K25X30X13	25	30	13	13200	18800	11000	16000	13
	K25X30X20	25	30	20	19400	31000	11000	16000	21
	K25X31X14	25	31	14	16500	22100	11000	16000	18
	K25X31X21	25	31	21	22500	33000	11000	16000	26
	K25X32X16	25	32	16	19500	24700	11000	16000	25
	K25X33X24	25	33	24	34500	47000	11000	16000	40
26	K26X30X17	26	30	17	15500	27400	10000	15000	15
	K26X34X22	26	34	22	24200	30000	10000	15000	41
28	K28X32X21	28	32	21	18700	35500	9500	14000	20
	K28X33X17	28	33	17	18300	29800	9500	14000	20
	K28X33X27	28	33	27	28300	52000	9500	14000	32
	K28X34X17	28	34	17	18000	25800	9500	14000	24
	K28X35X18	28	35	18	21500	28900	9500	14000	31
30	K30X35X20	30	35	20	21600	37500	8500	13000	25
	K30X35X27	30	35	27	29900	57000	8500	13000	33
	K30X36X14	30	36	14	18600	27400	8500	13000	22
	K30X37X18	30	37	18	23300	33000	8500	13000	34
	K30X37X20	30	37	20	26200	38000	8500	13000	38
	K30X38X18	30	38	18	25000	33000	8500	13000	36
32	K32X36X15	32	36	15	14300	26400	8500	13000	17
	K32X37X17	32	37	17	19200	33000	8500	13000	22
	K32X37X27	32	37	27	29600	57500	8500	13000	37
	K32X38X20	32	38	20	25100	41000	8500	13000	31
	K32X38X26	32	38	26	31500	54000	8500	13000	41
	K32X39X16	32	39	16	22600	32000	8500	13000	34
	K32X39X20	32	39	20	26800	40000	8500	13000	41
35	K35X40X17	35	40	17	20000	36000	7500	11000	25
	K35X41X15	35	41	15	20900	33500	7500	11000	27
	K35X42X20	35	42	20	28500	44500	7500	11000	41
	K35X42X30	35	42	30	39500	68000	7500	11000	62
37	K37X42X27	37	42	27	32500	67500	7500	11000	41
	K37X44X18	37	44	18	26300	41000	7500	11000	42
38	K38X43X27	38	43	27	32000	67500	7500	11000	43
	K38X46X20	38	46	20	34000	52000	7500	11000	46
	K38X46X32	38	46	32	54000	95500	7500	11000	73

FBJ®

Radial Needle Roller and Cage Assemblies

K Series

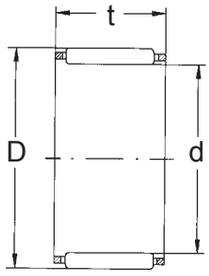

K

Shaft Diameter (mm)	Bearing Number	Dimensions(mm)			Basic Load Ratings(N)		Limiting Speeds(rpm)		Weight (g)
		d	D	t	Dynamic	Static	Grease	Oil	
40	K40X45X17	40	45	17	21800	41500	6500	10000	27
	K40X45X21	40	45	21	26700	54000	6500	10000	37
	K40X45X27	40	45	27	33500	72500	6500	10000	44
	K40X46X17	40	46	17	24600	43000	6500	10000	30
	K40X47X20	40	47	20	31000	51500	6500	10000	48
	K40X48X20	40	48	20	33000	51000	6500	10000	52
	K40X48X25	40	48	25	42500	71000	6500	10000	65
42	K42X47X27	42	47	27	34000	75500	6500	9500	47
	K42X48X17	42	48	17	25700	46000	6500	9500	36
	K42X50X20	42	50	20	34000	53500	6500	9500	54
43	K43X48X17	43	48	17	22000	43000	6500	9500	29
	K43X48X27	43	48	27	34000	75500	6500	9500	46
	K43X50X18	43	50	18	29100	49000	6500	9500	49
45	K45X50X27	45	50	27	34500	78000	6000	9000	50
	K45X52X18	45	52	18	29700	51000	6000	9000	51
	K45X52X21	45	52	21	32000	56500	6000	9000	61
	K45X53X20	45	53	20	36000	59000	6000	9000	62
	K45X53X25	45	53	25	46500	82000	6000	9000	77
	K45X53X28	45	53	28	49500	90000	6000	9000	78
47	K47X52X27	47	52	27	35500	83000	5500	8500	51
48	K48X54X19	48	54	19	31000	61000	5500	8500	44
50	K50X55X20	55	55	20	27900	62000	5500	8000	42
	K50X55X27	50	55	27	37000	88500	5500	8000	53
	K50X55X30	50	55	30	39500	97000	5500	8000	59
	K50X57X18	50	57	18	31500	57000	5500	8000	53
	K50X58X20	50	58	20	38500	67500	5500	8000	65
	K50X58X25	50	58	25	48500	90000	5500	8000	81
55	K55X60X20	55	60	20	28800	66500	5000	7500	45
	K55X60X30	55	60	30	42000	108000	5000	7500	69
	K55X61X20	55	61	20	33000	69500	5000	7500	54
	K55X61X30	55	61	30	48000	113000	5000	7500	81
	K55X62X18	55	62	18	33500	63000	5000	7500	54
	K55X63X20	55	63	20	39000	70000	5000	7500	73
	K55X63X25	55	63	25	50500	97500	5000	7500	88
	K55X63X30	55	63	30	61000	125000	5000	7500	117
58	K58X64X19	58	64	19	34000	73500	4700	7000	52
60	K60X65X20	60	65	20	29800	71500	4300	6500	51
	K60X65X30	60	65	30	43500	116000	4300	6500	71
	K60X66X20	60	66	20	33500	73500	4300	6500	56
	K60X66X30	60	66	30	49000	119000	4300	6500	84
	K60X68X20	60	68	20	40000	75000	4300	6500	77
	K60X68X23	60	68	23	44500	85000	4300	6500	92
	K60X68X25	60	68	25	52000	105000	4300	6500	97
61	K61X66X20	61	66	20	29700	71500	4300	6500	54
	K61X66X30	61	66	30	43500	116000	4300	6500	73
65	K65X70X20	65	70	20	30500	75000	4000	6000	55
	K65X70X30	65	70	30	45000	124000	4000	6000	83
	K65X73X23	65	73	23	47000	94000	4000	6000	100
	K65X73X30	65	73	30	61000	132000	4000	6000	126
68	K68X74X20	68	74	20	36000	83500	4000	6000	65
	K68X74X30	68	74	30	51500	133000	4000	6000	97
	K68X75X21	68	75	21	45500	101000	4000	6000	77

K Series

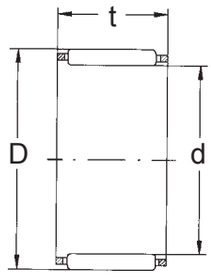

K

Radial Needle Roller and Cage Assemblies

Shaft Diameter (mm)	Bearing Number	Dimensions(mm)			Basic Load Ratings(N)		Limiting Speeds(rpm)		Weight (g)
		d	D	t	Dynamic	Static	Grease	Oil	
70	K70X76X20	70	76	20	36500	86000	3700	5500	70
	K70X76X30	70	76	30	53000	139000	3700	5500	100
	K70X77X21	70	77	21	45000	101000	3700	5500	80
	K70X78X23	70	78	23	49500	103000	3700	5500	107
	K70X78X30	70	78	30	65500	149000	3700	5500	136
75	K75X81X20	75	81	20	40500	100000	3700	5500	64
	K75X81X30	75	81	30	56000	152000	3700	5500	108
	K75X82X21	75	82	21	46000	106000	3700	5500	88
	K75X83X23	75	83	23	50500	109000	3700	5500	113
	K75X83X30	75	83	30	67500	157000	3700	5500	147
80	K80X86X20	80	86	20	39000	98000	3300	5000	77
	K80X86X30	80	86	30	57000	159000	3300	5000	110
	K80X88X20	80	88	20	53000	118000	3300	5000	125
	K80X88X26	80	88	26	61000	142000	3300	5000	131
	K80X88X30	80	88	30	69000	166000	3300	5000	151
82	K82X89X20	82	89	20	55000	12000	3300	5000	130
85	K85X92X20	85	92	20	47500	115000	3100	4700	83
	K85X92X30	85	92	30	66000	176000	3100	4700	142
	K85X93X27	85	93	27	64000	153000	3100	4700	145
	K85X93X30	85	93	30	71000	175000	3100	4700	160
84	K84X92X20	84	92	20	55000	12000	3300	5000	126
90	K90X97X20	90	97	20	46000	113000	2900	4400	103
	K90X97X30	90	97	30	67800	184000	2900	4400	151
	K90X98X26	90	98	26	64000	157000	2900	4400	148
	K90X98X27	90	98	27	64000	157000	2900	4400	150
	K90X98X30	90	98	30	72500	184000	2900	4400	172
95	K95X102X20	95	102	20	48000	122000	2800	4200	115
	K95X102X30	95	102	30	70500	199000	2800	4200	172
	K95X103X27	95	103	27	65500	165000	2800	4200	159
	K95X103X30	95	103	30	74000	193000	2800	4200	165
99	K99X107X20	99	107	20	74000	20000	2700	4000	112
100	K100X107X21	100	107	21	49000	127000	2700	4000	120
	K100X107X31	100	107	31	71500	207000	2700	4000	173
	K100X108X27	100	108	27	6100	153000	2700	4000	176
	K100X108X30	100	108	30	7600	201000	2700	4000	198
101	K101X109X20	101	109	20	77000	22000	2700	4000	182

FBJ®

Needle Roller Bearings

NA22 Series

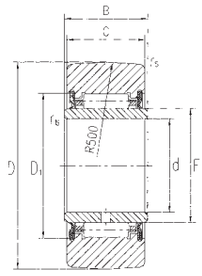

NA22

Bearing Number	Dimensions (mm)								Basic Load Ratings (N)		Limiting Speed Grease min^{-1}	Weight g
	D	d	F[1]) F^w	B	C	r_s min.	r_{1s}	D^t	*Cr*	*Cor*		
NA 2200.2RS	30	10	14	14	13.8	0.6	0.3	20	7800	8300	11000	60
NA 2201.2RS	32	12	16	14	13.8	0.6	0.3	22	8700	9900	9500	67
NA 2202.2RS	35	15	20	14	13.8	0.6	0.3	26	9800	12300	7000	75
NA 2203.2RS	40	17	22	16	15.8	0.6	0.3	28	12200	16700	6000	112
NA 2204.2RS	47	20	25	18	17.8	1	0.3	33	18900	22300	4600	117
NA 2205.2RS	52	25	30	18	17.8	1	0.3	38	21100	27000	3500	209
NA 2206.2RS	62	30	35	20	19.8	1	0.3	43	23300	32000	2800	324
NA 2207.2RS	72	35	42	23	22.7	1.1	0.6	50	30000	46500	2200	505
NA 2208.2RS	80	40	48	23	22.7	1.1	0.6	57	38500	58000	1700	628
NA 2209.2RS	85	45	52	23	22.7	1.1	0.6	62	40500	64000	1600	655
NA 2210.2RS	90	50	58	23	22.7	1.1	0.6	68	42500	70000	1300	690

Yoke Type Track Rollers With Axial Guidance

NATV Series

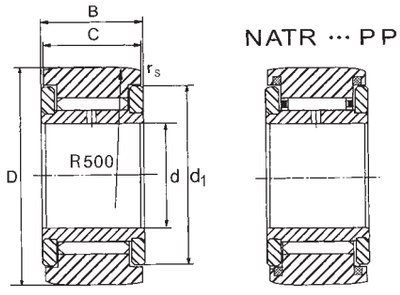

NATV

NATV ··· PP

Outside Diameter mm	Item Number		Dimensions (mm)						Basic Load Ratings (N)		Limiting Speed[1]) n_1 oil ≈ min^{-1}	Weight g
			d	D	B	C	r_s	d_1 min	*Cr*	*Cor*		
16	**NATV5**	**NATV5PP**	5	16	12	11	0.15	12	3800	3750	*22000	14
19	**NATV6**	**NATV6PP**	6	19	12	11	0.15	14	7300	10800	7000	21
24	**NATV8**	**NATV8PP**	8	24	15	14	0.3	19	10400	15600	5500	42
30	**NATV10**	**NATV10PP**	10	30	15	14	0.6	23	12200	19000	4500	65
32	**NATV12**	**NATV12PP**	12	32	15	14	0.6	25	13200	21700	3900	72
35	**NATV15**	**NATV15PP**	15	35	19	18	0.6	27	18300	35000	3400	105
40	**NATV17**	**NATV17PP**	17	40	21	20	1	32	21000	39500	2900	152
47	**NATV20**	**NATV20PP**	20	47	25	24	1	37	28000	59000	2600	254
52	**NATV25**	**NATV25PP**	25	52	25	24	1	42	31000	72000	2100	285
62	**NATV30**	**NATV30PP**	30	62	29	28	1	51	48500	108000	1700	481
72	**NATV35**	**NATV35PP**	35	72	29	28	1.1	58	53000	127000	1400	647
80	**NATV40**	**NATV40PP**	40	80	32	30	1.1	66	66000	159000	1300	890
90	**NATV50**	**NATV50PP**	50	90	32	30	1.1	76	72000	191000	1000	990

KR Series

Stud Type Track Rollers

KR

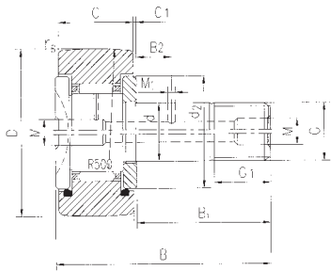

KR...PP

Outside Diameter mm	Item Number	Dimensions (mm)													Nut Tighening Torque M_A N_m	Basic Load Ratings (N)		Limiting Speed	Weight g
		D	d	C	r_s min	B	B_1	B_2	G	G_1	M	M_1	C_1	d_2		*Cr*	*Cor*	min^{-1}	
16	**KR16PP**	16	6	11	0.15	28	16	-	M6	8	4[5]	-	0.6	12	3	3800	3750	16000	18
19	**KR19PP**	19	8	11	0.15	32	20	-	M8	10	4[5]	-	0.6	14	8	4250	4600	14000	28
22	**KR22PP**	22	10	12	0.3	36	23	-	M10X1	12	4	-	0.6	17	15	5700	6500	11000	44
26	**KR26PP**	26	10	12	0.3	36	23	-	M10X1	12	4	3	0.6	17	15	5700	6500	11000	58
30	**KR30PP**	30	12	14	0.6	40	25	6	M12X1.5	13	6	3	0.6	23	22	8100	9700	8300	87
32	**KR32PP**	32	12	14	0.6	40	25	6	M12X1.5	13	6	3	0.8	27	22	8100	9700	8300	98
35	**KR35PP**	35	16	18	0.6	52	32.5	8	M16X1.5	17	6	3	0.8	27	58	12900	19000	7000	169
40	**KR40PP**	40	18	20	1	58	36.5	8	M18X1.5	19	6	3	0.8	32	87	14200	20400	6000	247
47	**KR47PP**	47	20	24	1	66	40.5	9	M20X1.5	21	8	4	0.8	37	120	19500	32000	4900	386
52	**KR52PP**	52	20	24	1	66	40.5	9	M20X1.5	21	8	4	0.8	37	120	19500	32000	4900	461
62	**KR62PP**	62	24	29	1	80	29.5	11	M24X1.5	25	8	4	0.8	44	220	30500	53000	3800	790
72	**KR72PP**	72	24	29	1.1	80	49.5	11	M24X1.5	25	8	4	0.8	44	220	30500	53000	3800	1040
80	**KR80PP**	80	30	35	1.1	100	63	15	M30X1.5	32	8	4	1	53	450	45000	85000	2600	1550
85	**KR85PP**	85	30	35	1.1	100	63	15	M30X1.5	32	8	4	1	53	450	45000	85000	2600	1740
90	**KR90PP**	90	30	35	1.1	100	63	15	M30X1.5	32	8	4	1	53	450	45000	85000	2600	1950

KRV

KRV Series

Stud Type Track Rollers

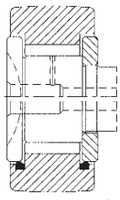

KRV···PP[1])

Outside Diameter mm	Item Number	Dimensions (mm)													Nut Tighening Torque M_A N_m	Basic Load Ratings (N)		Limiting Speed	Weight g
		D	d	C	r_s min	B	B_1	B_2	G	G_1	M	M_1	C_1	d_2		*Cr*	*Cor*	min^{-1}	
16	**KRV16PP**	16	6	11	0.15	28	16	-	M6	8	4[5]	-	0.6	12	3	6400	8500	8500	20
19	**KRV19PP**	19	8	11	0.15	32	20	-	M8	10	4[5]	-	0.6	14	8	7300	10800	7000	32
22	**KRV22PP**	22	10	12	0.3	36	23	-	M10X1	12	4	-	0.6	17	15	8600	12900	6000	45
26	**KRV26PP**	26	10	12	0.3	36	23	-	M10X1	12	4	3	0.6	17	15	8600	12900	6000	61
30	**KRV30PP**	30	12	14	0.6	40	25	6	M12X1.5	13	6	3	0.6	23	22	12200	19000	4500	89
32	**KRV32PP**	32	12	14	0.6	40	25	6	M12X1.5	13	6	3	0.8	27	22	12200	19000	4500	100
35	**KRV35PP**	35	16	18	0.6	52	32.5[4]	8	M16X1.5	17	6	3	0.8[4]	21[4]	58	23000	27000	6500	164
40	**KRV40PP**	40	18	20	1	58	36.5[4]	8	M18X1.5	19	6	3	0.8[4]	23[4]	87	24800	31000	5500	242
47	**KRV47PP**	47	20	24	1	66	40.5	9	M20X1.5	21	8	4	0.8	37	120	28000	59000	2600	390
52	**KRV52PP**	52	20	24	1	66	40.5	9	M20X1.5	21	8	4	0.8	37	120	28000	59000	2600	465
62	**KRV62PP**	62	24	29	1	80	29.5	11	M24X1.5	25	8	4	0.8	44	220	41500	91000	2200	802
72	**KRV72PP**	72	24	29	1.1	80	49.5	11	M24X1.5	25	8	4	0.8	44	220	41500	91000	2200	1045
80	**KRV80PP**	80	30	35	1.1	100	63	15	M30X1.5	32	8	4	1	53	450	60000	142000	1700	1561
90	**KRV90PP**	90	30	35	1.1	100	63	15	M30X1.5	32	8	4	1	53	450	60000	142000	1700	1970

FBJ®

Linear Motion Bearings

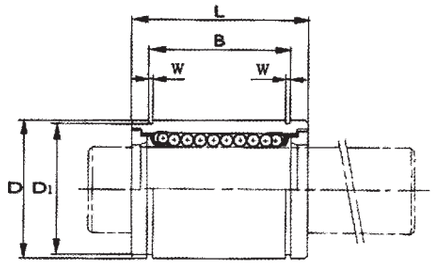

LM Series Built-in Synthetic Resin Retainer

Nominal Part No.							Nominal Shaft Diameter(mm)
Standard	Type	Seal Type	Ball Circuit	Weight g	Adjustable Type	Open Type	dr
LM	5	LM 5UU	4	4	–	–	5
LM	6	LM 6UU	4	8	LM 6-AJ	–	6
LM	8S	LM 8SUU	4	11	LM 8S-AJ	–	8
LM	8	LM 8UU	4	16	LM 8-AJ	–	8
LM	10	LM 10UU	4	30	LM 10-AJ	–	10
LM	12	LM 12UU	4	31.5	LM 12-AJ	LM 12-OP	12
LM	13	LM 13UU	4	43	LM 13-AJ	LM 13-OP	13
LM	16	LM 16UU	5	69	LM 16-AJ	LM 16-OP	16
LM	20	LM 20UU	5	87	LM 20-AJ	LM 20-OP	20
LM	25	LM 25UU	6	220	LM 25-AJ	LM 25-OP	25
LM	30	LM 30UU	6	250	LM 30-AJ	LM 30-OP	30
LM	35	LM 35UU	6	390	LM 35-AJ	LM 35-OP	35 38
LM	40	LM 40UU	6	585	LM 40-AJ	LM 40-OP	40
LM	50	LM 50UU	6	1580	LM 50-AJ	LM 50-OP	50
LM	60	LM 60UU	6	2000	LM 60-AJ	LM 60-OP	60

Linear Motion

Linear Motion Bearings

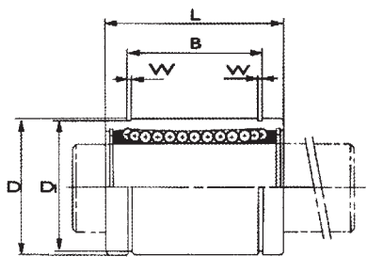

LME Series Built-in Synthetic Resin Retainer

Nominal Part No.							Nominal Shaft Diameter(mm)
Standard	Type	Seal Type	Ball Circuit	Weight g	Adjustable Type	Open Type	dr
LME	5	LME 5UU	3	11	LME 5-AJ		5
LME	8	LME 8UU	4	20	LME 8-AJ		8
LME	12	LME 12UU	4	41	LME 12-AJ	LME 12-OP	12
LME	16	LME 16UU	5	65	LME 16-AJ	LME 16-OP	16
LME	20	LME 20UU	5	91	LME 20-AJ	LME 20-OP	20
LME	25	LME 25UU	6	215	LME 25-AJ	LME 25-OP	25
LME	30	LME 30UU	6	325	LME 30-AJ	LME 30-OP	30
LME	40	LME 40UU	6	705	LME 40-AJ	LME 40-OP	40
LME	50	LME 50UU	6	1130	LME 50X-AJ	LME 50-OP	50
LME	60	LME 60UU	6	2220	LME 60-AJ	LME 60-OP	60

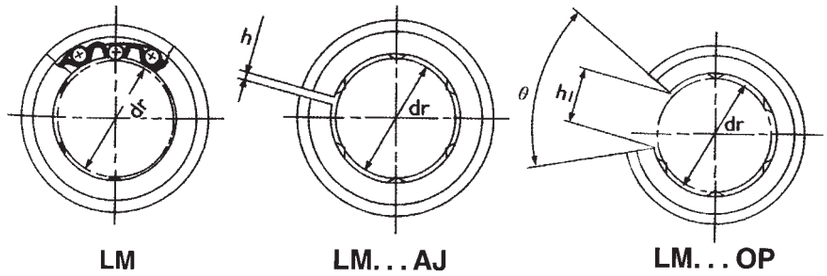

LM LM. . . AJ LM. . . OP

Major Dimensions and Tolerance (mm)								Eccentricity (max)	Radial Clearance (max)	Basic Load Ratings		Nominal Part No.
D	L	B	W	D_1	h	h_1	Temp			C kgf	Cor kgf	
10	15	10.2	1.1	9.6	–	–	–	8	-3	17	21	LM 5
12	19	13.5	1.1	11.5	1	–	–	12	-5	21	27	LM 6
15	17	11.5	1.1	14.3	1	–	–	12	-5	18	23	LM 8S
15	24	17.5	1.1	14.3	1	–	–	12	-5	27	41	LM 8
19	29	22	1.3	18	1			12	-5	38	56	LM 10
21	30	23	1.3	20	1.5	8	80˚	12	-5	42	61	LM 12
23	32	23	1.3	22	1.5	9	80˚	12	-7	52	79	LM 13
28	37	26.5	1.6	27	1.5	11	60˚	12	-7	79	120	LM 16
32	42	30.5	1.6	30.5	1.5	11	60˚	15	-9	88	140	LM 20
40	59	41	1.85	38	2	12	50˚	15	-9	100	160	LM 25
45	64	44.5	1.85	43	2.5	15	50˚	15	-9	160	280	LM 30
52	70	49.5	2.1	49	2.5	17	50˚	20	-13	170	320	LM 35
60	80	60.5	2.1	57	3	20	50˚	20	-13	220	410	LM 40
80	100	74	2.6	76.5	3	25	50˚	20	-13	390	810	LM 50
90	110	85	3.15	86.5	3	30	50˚	25	-16	480		LM 60

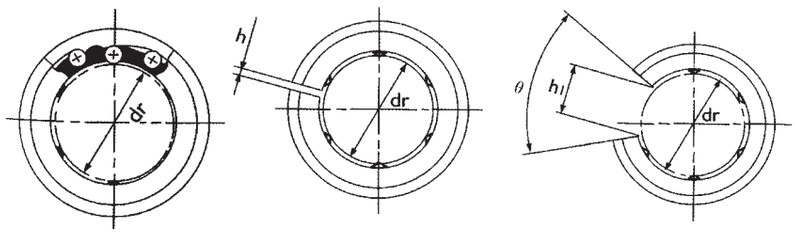

LME LME. . . AJ LME. . . OP

Major Dimensions and Tolerance (mm)								Eccentricity (max)	Radial Clearance (max)	Basic Load Ratings		Nominal Part No.
D	L	B	W	D_1	h	h_1	Temp			C kgf	Cor kgf	
12	22	14.5	1.1	11.5	1			12	-5	21	27	LME 5
16	25	16.5	1.1	15.2	1			12	-5	27	41	LME 8
22	32	22.9	1.3	21	1.5	7.5	78˚	12	-7	52	79	LME 12
26	36	24.9	1.3	24.9	1.5	10	78˚	12	-7	59	91	LME 16
32	45	31.5	1.6	30.3	2	10	60˚	15	-9	88	140	LME 20
40	58	44.1	1.85	37.5	2	12.5	60˚	15	-9	100	160	LME 25
47	68	52.1	1.85	44.5	2	12.5	50˚	15	-9	160	280	LME 30
62	80	60.6	2.15	59	3	16.8	50˚	17	-13	220	410	LME 40
75	100	77.6	2.65	72	3	21	50˚	17	-13	390	810	LME 55
90	125	101.7	3.15	86.5	3	27.2	54˚	20	-16	480	1020	LME 60

FBJ®

Linear Motion Bearings

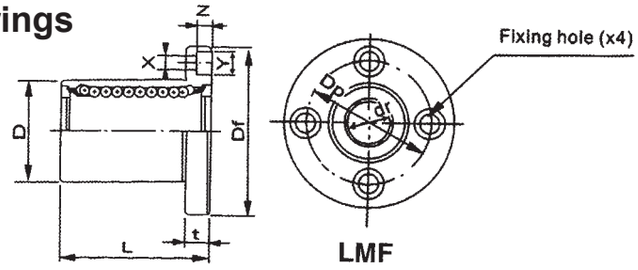

LMF

LMF Series Built-in Polyamide Retainer

Nominal Part No.					Major Dimensions and Tolerance (mm)											Basic Load Ratings		Nominal Part No.
Standard	Type	Seal Type	Ball Circuit	Weight g	dr	D	L	Flange						Eccentricity	Squareness	Dynamic CN	Static C_0N	
								Df	t	dP	X	Y	Z	μm	μm			
LMF	6	LMF 6UU	4	24	6	12	19	28	5	20	3.5	6	3.1	12	12	206	265	LMF 6
LMF	8S	LMF 6UU	4	32	8	15	17	32	5	24	3.5	6	3.1	12	12	176	216	LMF 8S
LMF	8	LMF 8SUU	4	37	8	15	24	32	5	24	3.5	6	3.1	12	12	274	392	LMF 8
LMF	10	LMF 10UU	4	72	10	19	29	40	6	29	4.5	7.5	4.1	12	12	372	549	LMF 10
LMF	12	LMF 12UU	4	76	12	21	30	42	6	32	4.5	7.5	4.1	12	12	510	784	LMF 12
LMF	13	LMF 13UU	4	88	13	23	32	43	6	33	4.5	7.5	4.1	12	12	510	784	LMF 13
LMF	16	LMF 16UU	4	120	16	28	37	48	6	38	4.5	7.5	4.1	12	12	774	1,180	LMF 16
LMF	20	LMF 20UU	5	180	20	32	42	54	8	43	5.5	9	5.1	15	15	882	1,370	LMF 20
LMF	25	LMF 25UU	5	340	25	40	59	62	8	51	5.5	9	5.1	15	15	980	1,570	LMF 25
LMF	30	LMF 30UU	6	470	30	45	64	74	10	60	6.6	11	6.1	15	15	1,570	2,740	LMF 30
LMF	35	LMF 35UU	6	650	35	52	70	82	10	67	6.6	11	6.1	20	20	1,670	3,140	LMF 35
LMF	40	LMF 40UU	6	1,060	40	60	80	96	13	78	9	14	8.1	20	20	2,160	4,020	LMF 40
LMF	50	LMF 50UU	6	2,200	50	80	100	116	13	98	9	14	8.1	20	20	3,820	7,900	LMF 50
LMF	60	LMF 60UU	6	3,000	60	90	110	134	18	112	11	17	11.1	25	25	4,700	10,000	LMF 60

SI Unit 1N=0.102kgf

Linear Motion

Linear Motion Bearings

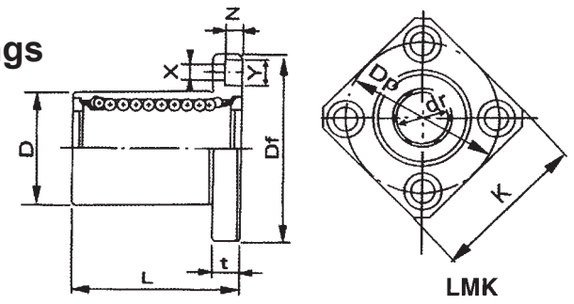

LMK

LMK Series Built-in Polyamide Retainer

Nominal Part No.					Major Dimensions and Tolerance											Basic Load Ratings		Nominal Part No.
Standard	Type	Seal Type	Ball Circuit	Weight g	dr	D	L	Flange						Eccentricity	Squareness	Dynamic CN	Static C_0N	
								Df	K	t	DP	X	Y	Z	μm	μm		
LMK	6	LMK 6UU	4	24	6	12	19	28	22	5	20	3.5	6	3.1	12	12	206	265	LMK 6
LMK	8S	LMK 6UU	4	32	8	15	17	32	25	5	24	3.5	6	3.1	12	12	176	216	LMK 8S
LMK	8	LMK 8SUU	4	37	8	15	24	32	25	5	24	3.5	6	3.1	12	12	274	392	LMK 8
LMK	10	LMK 10UU	4	72	10	19	29	40	30	6	29	4.5	7.5	4.1	12	12	372	549	LMK 10
LMK	12	LMK 12UU	4	76	12	21	30	42	32	6	32	4.5	7.5	4.1	12	12	510	784	LMK 12
LMK	13	LMK 13UU	4	88	13	23	32	43	34	6	33	4.5	7.5	4.1	12	12	510	784	LMK 13
LMK	16	LMK 16UU	5	120	16	28	37	48	37	6	38	4.5	7.5	4.1	12	12	774	1,180	LMK 16
LMK	20	LMK 20UU	5	180	20	32	42	54	42	8	43	5.5	9	5.1	15	15	882	1,370	LMK 20
LMK	25	LMK 25UU	5	340	25	40	59	62	50	8	51	5.5	9	5.1	15	15	980	1,570	LMK 25
LMK	30	LMK 30UU	6	470	30	45	64	74	58	10	60	6.6	11	6.1	15	15	1,570	2,740	LMK 30
LMK	35	LMK 35UU	6	650	35	52	70	82	64	10	67	6.6	11	6.1	20	20	1,670	3,140	LMK 35
LMK	40	LMK 40UU	6	1,060	40	60	80	96	75	13	78	9	14	8.1	20	20	2,160	4,020	LMK 40
LMK	50	LMK 50UU	6	2,200	50	80	100	116	92	13	98	9	14	8.1	20	20	3,820	7,900	LMK 50
LMK	60	LMK 60UU	6	3,000	60	90	110	134	106		112	11	17	11.1	25	25	4,700	10,000	LMK 60

SI Unit 1N=0.102kgf

LMH Series Built-in Polyamide Retainer

Linear Motion Bearings

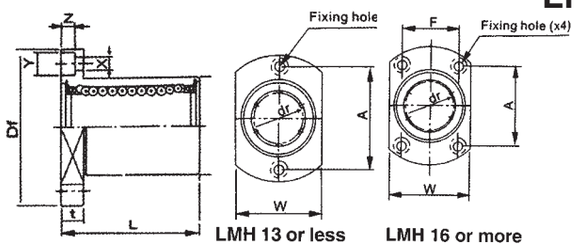

Nominal Part No.					Major Dimensions and Tolerance														Basic Load Ratings		Nominal Part No.
Standard	Type	Seal Type	Ball Circuit	Weight g	dr	D	L	Flange							Eccentricity μm	Squareness μm	Dynamic CN	Static C_0N	
								Df	W	t	A	F	X	Y	Z						
LMH	6	LMH 6UU	4	21	6	12	19	28	18	5	20		3.5	6	3.1	12	12	206	265	LMH 6
LMH	8	LMH 8UU	4	33	8	15	24	32	21	5	24		3.5	6	3.1	12	12	274	392	LMH 8
LMH	10	LMH 10UU	4	64	10	19	29	40	25	6	29		4.5	7.5	4.1	12	12	372	549	LMH 10
LMH	12	LMH 12UU	4	68	12	21	30	42	27	6	32		4.5	7.5	4.1	12	12	510	784	LMH 12
LMH	13	LMH 13UU	4	88	13	23	32	43	29	6	33		4.5	7.5	4.1	12	12	510	784	LMH 13
LMH	16	LMH 16UU	5	112	16	28	37	48	34	6	31		4.5	7.5	4.1	12	12	774	1,180	LMH 16
LMH	20	LMH 20UU	5	167	20	32	42	54	38	8	36		5.5	9	5.1	15	15	882	1,370	LMH 20
LMH	25	LMH 25UU	6	325	25	40	59	62	46	8	40		5.5	9	5.1	15	15	980	1,570	LMH 25
LMH	30	LMH 30UU	6	388	30	45	64	74	51	10	49		6.6	11	6.1	15	15	1,570	2,740	LMH 30

SI Unit 1N=0.102kgf

Shaft Holder SK Series

Linear Motion Bearings

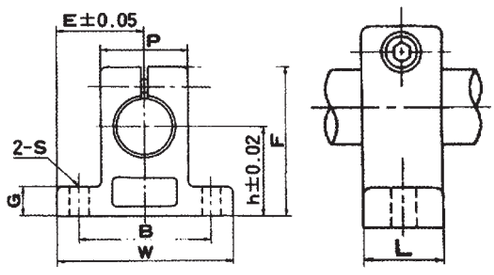

Unit：mm

Nominal Shaft Diameter	Part No.	Major Dimensions									Clamping bolt designation	Mounting bolt designation	Weight g
		h	E	W	L	F	G	P	B	S			
8	SK 8A	20	21	42	14	32.8	6	18	32	5.5	M4	M5	24
10	SK 10A	20	21	42	14	32.8	6	18	32	5.5	M4	M5	24
12	SK 12A	23	21	42	14	37.5	6	20	32	5.5	M4	M5	30
13	SK 13A	23	21	42	14	37.5	6	20	32	5.5	M4	M5	30
16	SK 16A	27	24	48	16	44	8	25	38	5.5	M4	M5	40
20	SK 20A	31	30	60	20	51	10	30	45	6.6	M5	M6	70
25	SK 25A	35	35	70	24	60	12	38	56	6.6	M6	M6	130
30	SK 30A	42	42	84	28	70	12	44	64	9	M6	M8	180
35	SK 35A	50	49	98	32	82	15	50	74	11	M8	M10	270
40	SK 40A	60	57	114	36	96	15	60	90	11	M8	M10	420
50	SK 50A	70	63	126	40	120	18	74	100	14	M12	M12	750
60	SK 60A	80	74	148	45	136	18	90	120	14	M12	M12	1,100

FBJ®

Rod End

PHS Series

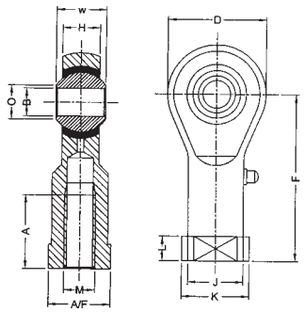

Model Number	Main Dimensions (mm)													Static load (kn)		Weight (g)
	B	W	O	H	D	F	K	J	L	A/F	A	Thread M	Permit of Angel α	Radial	Axial	
PHS 5 R/L H.	5	8	7.7	6	16	27	11	9	4	9	12	5X0.8	13	5.7	1.5	18
6	6	9	8.9	7	18	30	13	10	5	11	14	6X1.0	13	7	2	27
8F	8	12	10.4	9	22	36	16	12.5	5	14	17	8X1.0	13	11.6	3.5	46
8	8	12	10.4	9	22	36	16	12.5	5	14	17	8X1.25	13	11.6	3.5	46
10F	10	14	12.9	11	26	43	19	15	6.5	17	21	10X1.25	13	14.5	4.8	78
10	10	14	12.9	11	26	43	19	15	6.5	17	21	10X1.5	13	14.5	4.8	78
12F	12	16	15.4	12	30	50	22	17.5	6.5	19	24	12X1.25	13	17	6.5	115
12	12	16	15.4	12	30	50	22	17.5	6.5	19	24	12X1.75	13	17	6.5	115
14F	14	19	16,8	14	34	57	25	20	8	21	27	14X1.5	15	24	8.2	170
14	14	19	16.8	14	34	57	25	20	8	21	27	14X2.0	15	24	8.2	170
16F	16	21	19.3	15	38	64	27	22	8	22	33	16X1.5	15	28.5	10	230
16	16	21	19.3	15	38	64	27	22	8	22	33	16X2.0	15	28.5	10	230
18	18	23	21.8	17	42	71	31	25	10	27	36	18X1.5	15	35	12.5	320
20	20	25	24.3	18	46	77	34	27.5	10	30	40	20X1.5	15	40	15	420
22	22	28	25.8	20	50	84	37	30	12	32	43	22X1.5	15	52	18	540
25	25	31	29.6	22	56	94	42	33.5	12	48	48	24X2.0	15	60	23	750
30	30	37	34.8	26	67	110	50	40	15	56	56	30X2.0	15	81	30	1130

PHS 1/4 R/L H.	6.35	9	8.9	7	18	30	13	10	5	11	14	1/4-28UNF	13	7	2	27
5/15	7.94	12	10.4	9	22	36	16	12.5	5	14	17	5/16-24UNF	13	11.6	3.5	46
3/8	9.53	14	12.9	11	26	43	19	15	6.5	17	21	3/8-24UNF	13	14.5	4.8	78
1/2	12.70	16	15.4	12	30	50	22	17.5	6.5	19	24	1/2-20UNF	13	17	6.5	115
5/8	15.88	21	19.3	15	38	64	27	22	8	22	33	5/18-18UNF	15	28.5	10	230
3/4	19.05	23	21.8	17	42	71	31	25	10	27	36	3/4-16UNF	15	35	12.5	320

POS Series

Rod End

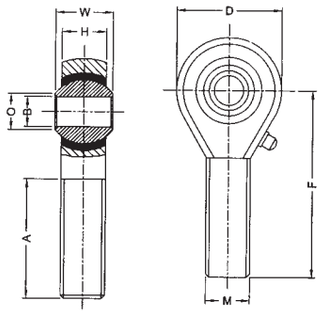

Model Number	Main Dimensions (mm)													Static load (kn)		Weight (g)
	B	W	O	H	D	F	K	J	L	A/F	A	Thread M	Permit of Angel α	Radial	Axial	
POS 5 R/L H.	5	8	7.7	6	16	33	-	-	-	-	20	5X0.8	13	5.7	1.5	14
6	6	9	8.9	7	18	36	-	-	-	-	22	6X1.0	13	7	2	21
8F	8	12	10.4	9	22	42	-	-	-	-	25	8X1.0	13	11.6	3.5	34
8	8	12	10.4	9	22	42	-	-	-	-	25	8X1.25	13	11.6	3.5	34
10F	10	14	12.9	11	26	48	-	-	-	-	29	10X1.25	13	14.5	4.8	58
10	10	14	12.9	11	26	48	-	-	-	-	29	10X1.5	13	14.5	4.8	58
12F	12	16	15.4	12	30	54	-	-	-	-	33	12X1.25	13	17	6.5	92
12	12	16	15.4	12	30	54	-	-	-	-	33	12X1.75	13	17	6.5	92
14F	14	19	16.8	14	34	60	-	-	-	-	36	14X1.5	15	24	8.2	135
14	14	19	16.8	14	34	60	-	-	-	-	36	14X2.0	15	24	8.2	135
16F	16	21	19.3	15	38	66	-	-	-	-	40	16X1.5	15	28.5	10	205
16	16	21	19.3	15	38	66	-	-	-	-	40	16X2.0	15	28.5	10	205
18	18	23	21,8	17	42	72	-	-	-	-	44	18X1.5	15	35	12.5	285
20	20	25	24.3	18	46	78	-	-	-	-	47	20X1.5	15	40	15	370
22	22	28	25.8	20	50	84	-	-	-	-	51	22X1.5	15	52	18	475
25	25	31	29.6	22	56	94	-	-	-	-	57	24X2.0	15	60	23	650
30	30	37	34.8	26	67	110	-	-	-	-	66	30X2.0	15	81	30	1070

POS 1/4 R/L H.	6.35	9	8.9	7	18	36	-	-	-	-	22	1/4-28UNF	13	7	2	46
5/16	7.94	12	10.4	9	22	42	-	-	-	-	25	5/16-24UNF	13	11.6	3.5	34
3/8	9.53	14	12.9	11	26	48	-	-	-	-	29	3/8-24UNF	13	14.5	4.8	58
1/2	12.70	16	15.4	12	30	54	-	-	-	-	33	1/2-20UNF	13	17	5.0	92
5/8	15.88	21	19.3	15	38	66	-	-	-	-	40	5/8-18UNF	15	28.5	10	205
3/4	19.05	23	21.8	17	42	72	-	-	-	-	44	3/4-16UNF	15	35	12.5	285

FBJ®

Rod End

NHS Series

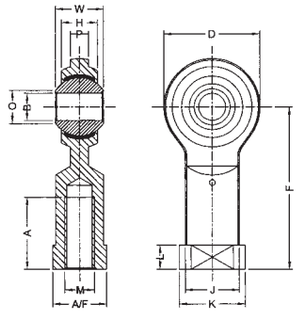

Model Number	Main Dimensions (mm)													Static load (kn)		Weight (g)
	B	W	O	H	D	F	K	J	P	A/F	A	Thread M	Permit of Angel α	Radial	Axial	
NHS 5 R/L H.	5	8	7.7	5.5	16	27	11	9	3	9	12	5X0.8	13	5.7	1.5	16
6	6	9	8.9	6	18	30	13	10	3.3	11	14	6X1.0	13	7	2	24
8F	8	12	10.4	8	22	36	16	12.5	4.5	14	17	8X1.0	13	11.6	3.5	41
8	8	12	10.4	8	22	36	16	12.5	4.5	14	17	8X1.25	13	11.6	3.5	41
10F	10	14	12.9	10	26	43	19	15	5.5	17	21	10X1.25	13	14.5	4.8	70
10	10	14	12.9	10	26	43	19	15	5.5	17	21	10X1.5	13	14.5	4.8	70
12F	12	16	15.4	11	30	50	22	17.5	6	19	24	12X1.25	13	17	6.5	104
12	12	16	15.4	11	30	50	22	17.5	6	19	24	12X1.75	13	17	6.5	104
14F	14	19	16.8	12	34	57	25	20	7	21	27	14X1.5	15	24	8.2	158
14	14	19	16.8	12	34	57	25	20	7	21	27	14X2.0	15	24	8.2	158
16F	16	21	19.3	13	38	64	27	22	7.5	22	33	16X1.5	15	28.5	10	258
16	16	21	19.3	13	38	64	27	22	7.5	22	33	16X2.0	15	28.5	10	200
18	18	23	21.8	15	42	71	31	25	8.5	27	36	18X1.5	15	35	12.5	288
20	20	25	24.3	16	46	77	34	27.5	9	30	40	20X1.5	15	40	15	372
22	22	28	25.8	18	50	84	37	30	10	32	43	22X1.5	15	52	18	475
25	25	31	29.6	20	56	94	42	33.5	12	36	48	24X2.0	15	60	23	680
30	30	37	34.8	24	67	110	50	40	15	41	56	30X2.0	15	81	30	1020

NHS 1/4 R/L H.	6.35	9	8.9	6	18	30	13	10	3.3	11	14	1/4-28UNF	13	7	2	24
5/16	7.94	12	10.4	8	22	36	16	12.5	4.5	14	17	5/16-24UNF	13	11.6	3.5	41
3/8	9.53	14	12.9	10	26	43	19	15	5.5	17	21	3/8-24UNF	13	14.5	4.8	70
1/2	12.70	16	15.4	11	30	50	22	17.5	6	19	24	1/2-20UNF	13	17	6.5	104
5/8	15.88	21	19.3	13	38	64	27	22	7.5	22	33	5/8-18UNF	15	28.5	10	200
3/4	19.05	23	21.8	15	42	71	31	25	8.5	27	36	3/4-16UNF	15	35	12.5	288

NOS Series

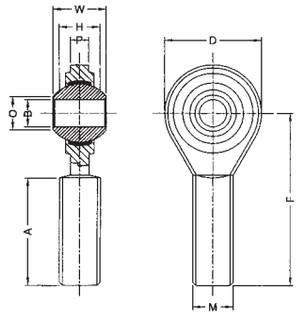

Rod End

Model Number	Main Dimensions (mm)													Static load (kn)		Weight (g)
	B	W	O	H	D	F	K	P	L	A/F	A	Thread M	Permit of Angel α	Radial	Axial	
NOS 5 R/L H.	5	8	7.7	5.5	16	33	-	3	-	-	20	5X0.8	13	5.7	1.5	13
6	6	9	8.9	6	18	36	-	3.3	-	-	22	6X1.0	13	7	2	17
8F	8	12	10.4	8	22	42	-	4.5	-	-	25	8X1.0	13	11.6	3.5	33
8	8	12	10.4	8	22	42	-	4.5	-	-	25	8X1.25	13	11.6	3.5	33
10F	10	14	12.9	10	26	48	-	5.5	-	-	29	10X1.25	13	14.5	4.8	54
10	10	14	12.9	10	26	48	-	5.5	-	-	29	10X1.5	13	14.5	4.8	54
12F	12	16	15.4	11	30	54	-	6	-	-	33	12X1.25	13	17	6.5	85
12	12	16	15.4	11	30	54	-	6	-	-	33	12X1.75	13	17	6.5	85
14F	14	19	16.8	12	34	60	-	7	-	-	36	14X1.5	15	24	8.2	129
14	14	19	16.8	12	34	60	-	7	-	-	36	14X2.0	15	24	8.2	129
16F	16	21	19.3	13	38	66	-	7.5	-	-	40	16X1.5	15	28.5	10	181
16	16	21	19.3	13	38	66	-	7.5	-	-	40	16X2.0	15	28.5	10	181
18	18	23	21.8	15	42	72	-	8.5	-	-	44	18X1.5	15	35	12.5	250
20	20	25	24.3	16	46	78	-	9	-	-	47	20X1.5	15	40	15	333
22	22	28	25.8	18	50	84	-	10	-	-	51	22X1.5	15	52	18	430
25	25	31	29.6	20	56	94	-	12	-	-	57	24X12.0	15	60	23	610
30	30	37	34.8	24	67	110	-	13	-	-	66	30X2.0	15	81	30	990

NOS 1/4 R/L H.	6.35	9	8.9	6	18	36	-	3.3	-	-	22	1/4-28UNF	13	7	2	17
5/16	7.94	12	10.4	8	22	42	-	4.5	-	-	25	5/16-24UNF	13	11.6	3.5	33
3/8	9.53	14	12.9	10	26	48	-	5.5	-	-	29	3/8-24UNF	13	14.5	4.8	54
1/2	12.70	16	15.4	11	30	54	-	6	-	-	33	1/2-20UNF	13	17	6.5	85
5/8	15.88	21	19.3	13	38	66	-	7.5	-	-	40	5/8-18UNF	15	28.5	10	181
3/4	19.05	23	21	15	42	72	-	8.5	-	-	44	3/4-16UNF	15	35	12.5	250

FBJ®

Female Rod End

SI-E Series

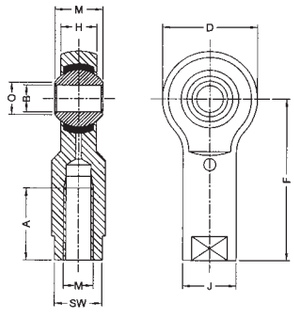

Model Number	Main Dimensions (mm)													Static load (kn)		Weight (g)
	B	W	O	H	D	F	K	J	L	SW	A	Thread M	Permit of Angel α	Radial	Axial	
SI 6E R/L H.	6	6	9	4	20	30	-	10	-	9	12	6X1.0	12	9	3	17
8E-F	8	8	10	5	23	36	-	13	-	11	16	8X1.0	12	15	5	31
8E	8	8	10	5	23	36	-	13	-	11	16	8X1.25	12	15	5	31
10E-F	10	9	12	6	28	43	-	16	-	14	20	10X1.25	14	20	7	54
10E	10	9	12	6	28	43	-	16	-	14	20	10X1.5	14	20	7	54
12F-F	12	10	15	7	32	50	-	19	-	17	22	12X1.25	14	25	8	86
12E	12	10	15	7	32	50	-	19	-	17	22	12X1.75	14	25	8	86
15ES-F	15	12	19	9	38	61	-	22	-	19	25	14X1.5	12	35	12	142
15ES	15	12	19	9	38	61	-	22	-	19	25	14X2.0	12	35	12	142
17ES-F	17	14	21	10	44	67	-	25	-	22	28	16X1.5	12	42	14	208
17ES	17	14	21	10	44	67	-	25	-	22	28	16X2.0	12	42	14	208
20ES	20	16	25	12	51	77	-	28	-	24	33	20X1.5	12	55	18	290
25ES	25	20	31	16	62	94	-	35	-	30	42	24X2.0	12	78	26	573

SI 1/4 E R/L H.	6.35	6	9	4	20	30	-	10	-	9	12	1/4-28UNF	12	9	3	17
5/16E	7.94	8	10	5	23	36	-	13	-	11	16	5/16-24UNF	12	15	5	31
3/8E	9.53	9	12	6	28	43	-	16	-	14	20	3/8-24UNF	14	20	7	54
1/2E	12.70	10	15	7	32	50	-	19	-	17	22	1/2-20UNF	14	25	8	86
5/8ES	15.88	14	21	10	44	67	-	25	-	22	28	5/8-18UNF	12	42	14	208
3/4ES	19.05	16	25	12	51	77	-	28	-	24	33	3/4-16UNF	12	55	18	290

SA-E Series

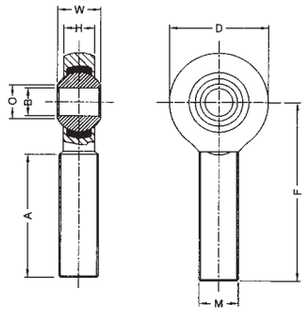

Male Rod End

Model Number	Main Dimensions (mm)													Static load (kn)		Weight (g)
	B	W	O	H	D	F	K	J	L	SW	A	Thread M	Permit of Angel α	Radial	Axial	
SI 6E R/L H.	6	6	9	4	20	36	-	-	-	-	22	6X1.0	12	9	3	14
8E-F	8	8	10	5	23	42	-	-	-	-	25	8X1.0	12	15	5	24
8E	8	8	10	5	23	42	-	-	-	-	25	8X1.25	12	15	5	24
10E-F	10	9	12	6	28	48	-	-	-	-	29	10X1.25	14	20	7	41
10E	10	9	12	6	28	48	-	-	-	-	29	10X1.5	14	20	7	41
12F-F	12	10	15	7	32	54	-	-	-	-	33	12X1.25	14	25	8	67
12E	12	10	15	7	32	54	-	-	-	-	33	12X1.75	14	25	8	67
15ES-F	15	12	19	9	38	63	-	-	-	-	36	14X1.5	12	35	12	110
15ES	15	12	19	9	38	63	-	-	-	-	36	14X2.0	12	35	12	110
17ES-F	17	14	21	10	44	69	-	-	-	-	40	16X1.5	12	42	14	163
17ES	17	14	21	10	44	69	-	-	-	-	40	16X2.0	12	42	14	163
20ES	20	16	25	12	51	78	-	-	-	-	47	20X1.5	12	55	18	270
25ES	25	20	31	16	62	94	-	-	-	-	57	24X2.0	12	78	26	508

SA 1/4 E R/L H.	6.35	6	9	4	20	36	-	-	-	-	22	1/4-28UNF	12	9	3	14
5/16E	7.94	8	10	5	23	42	-	-	-	-	25	5/16-24UNF	12	15	5	24
3/8E	9.53	9	12	6	28	48	-	-	-	-	29	3/8-24UNF	14	20	7	41
1/2E	12.70	10	15	7	32	54	-	-	-	-	33	1/2-20UNF	14	25	8	67
5/8ES	15.88	14	21	10	44	69	-	-	-	-	40	5/8-18UNF	12	42	14	163
3/4ES	19.05	16	25	12	51	78	-	-	-	-	47	3/4-16UNF	12	55	18	270

FBJ®

Stainless Steel Rod End

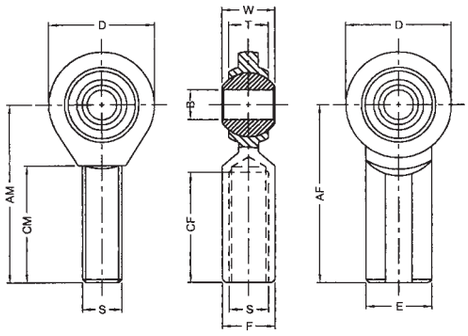

LM Series
LF Series

Inch Size

Model Number	Thread S	B	D	W	T	Ball Dia. ϕ	AM	AF	CM	CF	E ϕ	F	Permit of Angel α	Static load (LBS)	Weight (LBS)
LM3	UNF 3/16X10.32	0.1875	0.525	0.312	0.204	0.437	1.250	1.032	0.750	0.500	0.405	0.312	20°	1200	0.03
LF3															0.04
LM4	1/4-28UNF (M6X1)	0.2500 (M6)	0.760	0.375	0.250	0.500	1.562	1.242	1.000	0.625	0.468	0.375	20°	2000	0.05
LF4															0.06
LM5	5/16-24UNF (M8X12.5)	0.3125 (M8)	0.875	0.437	0.312	0.625	1.875	1.375	1.250	0.625	0.500	0.437	22°	3000	0.07
LF5															0.08
LM6	3/8-24UNF (M10X1.5)	0.375 (M10)	1.000	0.500	0.359	0.710	1.939	1.625	1.250	0.750	0.687	0.500	22°	4000	0.12
LF6															0.13
LM7	7/16-20UNF	0.4375	1.125	0.562	0.408	0.790	2.125	1.812	1.375	0.875	0.750	0.625	21°	5000	0.16
LF7															0.18
LM8	1/2-20UNF (M12X1.75)	0.5000 (M12)	1.1312	0.625	0.453	0.875	2.436	2.125	1.500	1.000	0.875	0.750	20°	6000	0.24
LF8															0.29
LM10	5/8-18UNF (M16X2.0)	0.625 (M16)	1.500	0.750	0.484	1.125	2.625	2.500	1.625	1.250	1.000	0.875	26°	8000	0.36
LF10															0.43
LM12	3/4-16UNF	0.7500	1.750	0.875	0.593	1.250	2.875	2.375	1.750	1.375	1.125	1.000	21°	10000	0.57
LF12															0.65

PB Series

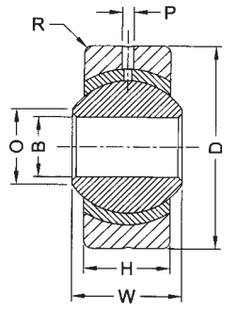

Spherical Plain Bearings

Model Number	Main Dimensions (mm)								Static load (kn)		Weight (g)
	B	W	O	H	D	P	R	Permit of Angel α	Radial	Axial	
PB 4	4	6	7.0	4.5	13	0.8	0.5	13	3	1	5
5	5	8	7.7	6	16	0.8	0.5	13	5.7	1.5	8.5
6	6	9	8.9	7	18	0.8	0.5	13	7	2	13
8	8	12	10.4	9	22	1.0	0.5	13	11.6	3.5	24
10	10	14	12.9	11	26	1.0	0.5	13	14.5	4	39
12	12	16	15.4	12	30	1.0	0.5	13	17	6.5	58
14	14	19	16.8	14	34	1.2	0.5	15	24	8.2	84
16	16	21	19.3	15	38	1.2	0.5	15	28.5	10	111
18	18	23	21.8	17	42	1.5	0.5	15	35	12.5	160
20	20	25	24.3	18	46	1.5	0.5	15	40	15	210
22	22	28	25.8	20	50	1.5	0.5	15	52	18	265
25	25	31	29.6	22	56	1.5	0.5	15	60	23	390

FBJ®

Spherical Plain Bearings

PC Series

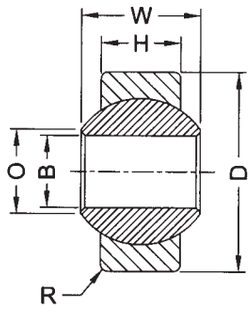

Model Number	Main Dimensions (mm)								Static load (kn)		Weight (g)
	B	W	O	H	D	P	R	Permit of Angel α	Radial	Axial	
PC 4	4	6	7.0	4.5	12	-	0.5	13	3	1	3.5
5	5	8	7.7	6	13	-	0.5	13	5.7	1.5	6
6	6	9	8.9	7	15	-	0.5	13	7	2	9
8	8	12	10.4	9	18	-	0.5	13	11.6	3.5	17
10	10	14	12.9	11	22	-	0.5	13	14.5	4	27
12	12	16	15.4	12	26	-	0.5	13	17	6.5	41
14	14	19	16.8	14	30	-	0.5	15	24	8.2	59
16	16	21	19.3	15	34	-	0.5	15	28.5	10	78
18	18	23	21.8	17	38	-	0.5	15	35	12.5	112
20	20	25	24.3	18	42	-	0.5	15	40	15	147
22	22	28	25.8	20	46	-	0.5	15	52	18	186
25	25	31	29.6	22	50	-	0.5	15	60	23	273

GE Series

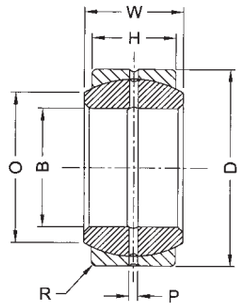

Spherical Plain Bearings

Model Number	Main Dimensions (mm)								Static load (kn)		Weight (g)
	B	W	O	H	D	P	R	Permit of Angel α	Radial	Axial	
GE 10	10	9	12	8	19	1.0	0.5	8	36	9	13
12	12	10	14	9	22	1.0	0.5	8	40	10	20
15	15	12	18	10	26	1.5	0.5	8	50	15	32
17	17	14	20	11	30	1.5	0.5	8	60	20	45
20	20	16	24	13	35	1.5	0.5	7	110	27	70
25	25	20	29	16	42	2	1.0	7	190	45	130
30	30	22	34	18	47	2	1.0	8	230	55	170
35	35	25	39	20	55	2	1.0	8	320	75	250
40	40	28	45	22	62	2.5	1.0	8	380	90	320
45	45	32	50	25	68	2.5	1.0	9	500	120	450
50	50	35	55	28	75	2.5	1.0	9	600	145	580
60	60	44	66	36	90	2.5	1.0	9	700	230	1100

FBJ®

Spherical Plain Bearings

GE-C Series

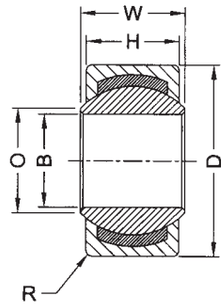

Model Number	Main Dimensions (mm)								Static load (kn)		Weight (g)
	B	W	O	H	D	P	R	Permit of Angel α	Radial	Axial	
GE 10C	10	9	12	8	19	-	0.5	8	80	20	13
12	12	10	14	9	22	-	0.5	8	100	25	20
15	15	12	18	10	26	-	0.5	8	120	30	32
17	17	14	20	11	30	-	0.5	8	160	40	45
20	20	16	24	13	35	-	0.5	7	200	50	70
25	25	20	29	16	42	-	1.0	7	380	90	130
30	30	22	34	18	47	-	1.0	8	450	100	170
35	35	25	39	20	55	-	1.0	8	650	150	250
40	40	28	45	22	62	-	1.0	8	850	200	320
45	45	32	50	25	68	-	1.0	9	1000	250	450
50	50	35	55	28	75	-	1.0	9	1200	300	580
60	60	44	66	36	90	-	1.0	9	2000	500	1100

BI Series

Link Ball

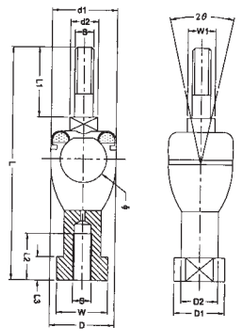

Model Number	Outline dimensions		Thread	Main Dimensions (mm)											Static load (kn)	Weight (g)
	L	D	S	L_1	L_2	L_3	D_1	D_2	W o -0.2	W o -0.2	d_1	d_2	Ball dia. ϕ	2θ		
BI-5	50	17	M5X0.8	12	15	4.5	11	9	9	7	18	8	11.11	25˚	25	25
BI-6	60	20	M6X1	17	18	5	13	10	11	8	21	10.5	12.7	25˚	36	40
BI-8	68	24	M8X1.25	26	20	6	16	12.5	14	11	26	14	15.88	25˚	50	75
BI-10F	85	28	M10X1.25	29	22	7	19	15	17	13	29	16	19.05	25˚	75	125
BI-10	85	28	M10X1.5	29	22	7	19	15	17	13	29	16	19.05	25˚	75	125
BI-12F	94	32	M12X1.25	30	25	7	22	17.5	19	14	33	18	22.22	25˚	100	190
BI-12	94	32	M12X1.75	30	25	7	22	17.5	19	14	33	18	22.22	25˚	100	190
BI-14F	108	36	M14X1.5	32	28	8	25	20	22	17	38	19	25.4	17˚	120	280
BI-14	108	36	M14X2	32	28	8	25	20	22	17	38	19	25.4	17˚	120	280
BI-16F	120	40	M16X1.5	34	30	8	27	22	22	19	44	21	25.4	17˚	140	370
BI-16	120	40	M16X2	34	30	8	27	22	22	19	44	21	25.4	17˚	140	370

FBJ®

Link Ball

BL Series

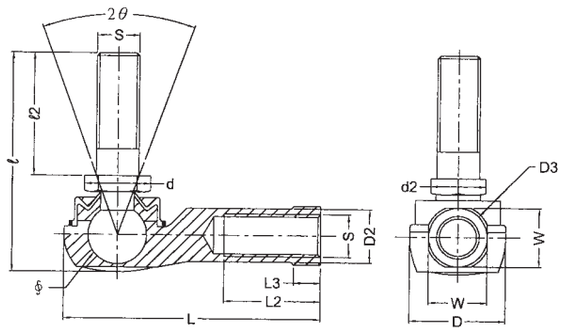

Model Number	Outline dimensions			Thread											Static load (kn)	Weight (g)
	L	D		S	L_2	L_3	D_2	D_3	W o -0.2	d	2	d_2	Ball dia. ϕ	2 θ		
BL-6	38	16	34	M6X1	16	5	10	13	11	8	16	7	11.11	40°	26	26
BL-8	46	19	41	M8X1.25	19	6	12.5	16	14	10.5	17	9	12.7	40°	50	49
BL-10F	56	25	52	M10X1.25	23	7	14.5	19	17	14	26	11	15.88	40°	75	90
BL-10	56	25	52	M10X1.5	23	7	14.5	19	17	14	26	11	15.88	40°	75	90
BL-12F	65	29	58	M12X1.25	26	8	17.5	22	19	16	29	13	19.05	40°	100	148
BL-12	65	29	58	M12X1.75	26	8	17.5	22	19	16	29	13	19.05	40°	100	148
BL-14F	74	34	75	M14X1.5	30	10	20	25	22	18	30	15	22.22	40°	120	245
BL-14	74	34	75	M14X2	30	10	20	25	22	18	30	15	22.22	40°	120	245
BL-16F	83	38	80	M16X1.5	34	11	22	27	24	19	32	17	22.22	30°	140	325
BL-16	83	38	80	M16X2	34	11	22	27	24	19	32	17	22.22	30°	140	325

Slewing Ring basics

Slewing rings, known for their large diameters and open centers, rotate unique machinery. Gear teeth add functionality. A slewing ring is a contained system of balls or rollers, caging, raceways, mounting provisions, and often, integral gearing as well. These large units are designed to transmit axial, radial, and tilting moment loads. And because they handle loads (and different combinations of them) in one assembly, these bearings eliminate weight, space, and cost penalties of other rotational designs.

The most suitable slewing ring for a design depends on static and dynamic loads, bolt requirements, and gearing specifications. How loads on a slewing ring are best calculated? By using the classical engineering approach of creating free-body diagrams and then solving for unknown variables using static equilibrium equations. (Such a sketch shows forces, their vectorial direction in terms of X and Y Cartesian coordinate values, and the X and Y perpendicular distances of these forces relative to the bearing center.) The bearing plane becomes a cut line for the free-body diagram dividing forces — left and right or top and bottom relative to the bearing plane. Bearing loads are simply the reaction forces at the cut plane. Equations of static equilibrium return reactionary forces at this plane are:

Σ Axial forces = 0
Σ Radial forces = 0
Σ Moments = 0

The directions of force and moment rotation are very important, indicating whether a value is positive or negative. Moment loads are calculated about the center of the ring — that is, where the center plane and rotation axis of the ring cross.

After loads have been calculated, product specification sheets can give basic data for choosing one or more possible bearing style for a particular application. To illustrate: Some rings are developed for use as fifth-wheel bogie steering pivots on trailer applications. Other slewing rings are common on general turntable applications; their moment capacity provides stability to turntables having diameters well in excess of the bearing diameter. Finally, slewing rings with high contact angles and increased internal clearance are suitable for thrust applications where the center of force remains within the raceway diameter.

Wire-race slewing rings are known for being very light and reliable. They're used in medical scanning equipment and radar antennas, and are appropriate where lightweight, replaceable raceways or ring material selection is an important consideration. However, self-selection is not recommended; manufacturers should be involved in the design process for slewing rings.

Listed raceway capacities are often static ratings. Since most large-diameter ring applications involve intermittent slewing and a broad spectrum of loads, it's prudent to select a ring based on its static capacity — and a recommended application service factor. Capacities listed are non-simultaneous: In other words, a catalog thrust capacity doesn't account for moment or radial loading. Similarly, moment capacity assumes no thrust or radial load, and listed radial capacity accounts for no thrust or moment. When applications involve a load combination, the load components must be combined into an equivalent load. (For static raceway calculations, this equivalent load is taken to be load as seen by the highest loaded rolling element.)

The exact machine duty cycle and the mounting structure design have tremendous influence on the durability of the ring. In high-cycle applications, dynamic capacity, rather than static capacity, may dominate the slewing ring selection.

Turning torque can be substantial on large-diameter slewing rings. Classical theory and empirical data from equations and catalog values helps estimate this value. Factors affecting turning torque include the frictional coefficient, applied loads, and their distribution, mounting orientation, rolling element separators, the flatness and stiffness of the supporting structure, the viscosity and amount of grease in the ring, the seal type and preload, and the presence of lubrication at the sealing interface. The torque required to rotate slewing rings is a function of all these influences.

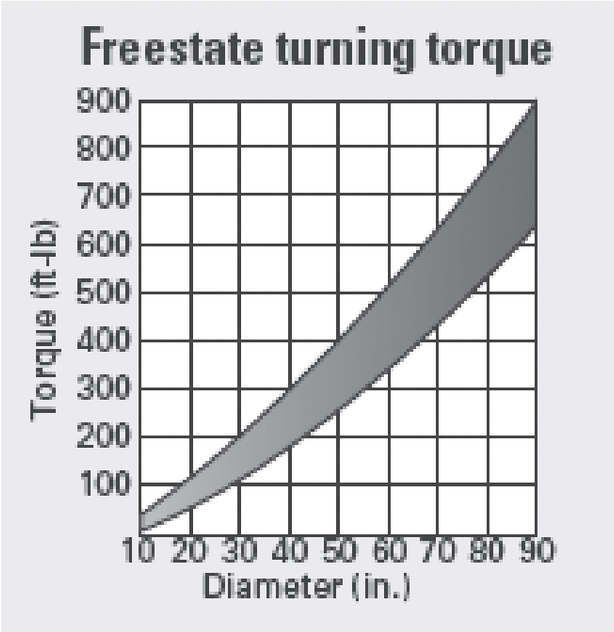

Estimates of freestate turning torque for most rings are charted here, from statistical studies of singlerow ball slewing ring lines with diameters from 12 to 90 in., dual seals and internal clearance.

Free state torque TF is the frictional torque of a bearing as it arrives out of the box, before any other load is applied. It's usually ignored when bearing loads are high. However, under relatively light loads, free-state torque values must be taken into account. (Estimates are charted for most standard slewing rings.)

Slewing rings with seals — and the drag they induce — typically exhibit higher free-state torque. Preloaded rings (manufactured with negative internal clearance) also exhibit greater free-state torque. For special designs, this value must be evaluated on an individual basis.

Load friction torque is a function of ring load magnitude. Average running torque TR under ideal conditions is:

$$T_R = \frac{\mu}{2}\left(k \cdot M_k + \frac{F_A \cdot D_L}{12} + \frac{k \cdot F_R \cdot D_L}{24}\right)$$

Where μ= Friction coefficient: Typically from 0.003 to 0.008
k = Load distribution factor: 4.37 for balls, 4.1 for rollers
MK = Moment load, ft-lb
FA= Axial load, lb
DL= Bearing race diameter, in.

Starting torque is typically one third greater than running torque. In contrast, turning torque can vary considerably even between supposedly identical bearings. The suggested design load friction torque is equal to fT . TR, where fT is a value from 2 to 5. The highest value of fT should be used when the supporting surfaces are at the high end of the flatness and stiffness limits and for designs operated until the maximum wear allowable wear limit is reached.

In addition to frictional torque, other sources of torque must be considered when sizing a drive unit. These can include affects from wind loads, gravitational forces, drag loads, acceleration inertia, and so on.

Ring torque T is the summation of free state, load friction, and all other external torque load components.

Slewing rings are available without gearing, but many slewing rings are supplied with either internal or external spur gear teeth cut into one race ring. An integrated gear eliminates additional bolt-on gears, which helps to reduce design work and cost. Just as with any gearing, slewing ring teeth must meet load ratings. In high-use or continually revolving applications, special dynamic calculations may be in order. Some slewing rings have induction-hardened gear teeth for wear resistance. Induction hardened gearing can substantially improve gear life by preventing surface wear and fatigue.

Various forms of gear induction hardening include spin, tooth flank, and tooth contour hardening. For slewing rings, tooth contour hardening is by far the most common. Tooth contour induction hardening provides hardness through the root of the gear teeth in addition to along the flanks. Hardening through the gear tooth root improves the bending fatigue life of the tooth. Flank hardening does not extend into the gear root region, and is usually limited to gears in abrasive environments with relatively low tooth loads.

Induction hardening can be provided on both internal and external spur gears. It greatly improves the life of the gear teeth in dynamic applications. Still, for most slow speed slewing applications, standard gear teeth will last the life of the slewing ring. The properties of the high-quality quench and tempered steel forgings used in the production of slewing rings also makes for high-quality gear teeth.

Axial load acts parallel to the axis of rotation. Compressive axial loads squeeze mounting surfaces together; it's commonly referred to as thrust load. Tensile axial load, on the other hand, acts to pull bearings away from supporting structures. Called a tension or a hanging load, tensile axial loads are not possible without mounting fasteners.

Radial load acts perpendicular to the axis of rotation. Often called side or shear loads, they're resisted by the frictional holding power of clamped interfaces. In certain cases, precision cylindrical pilots or dowels are used to transmit high radial loads.

Moment or overturning loads act about a line perpendicular to the axis of rotation. They result from an axial load applied at a distance from the axis of rotation, a radial load applied at a perpendicular distance from the bearing plane, or a combination of both. A moment load induces thrust on one half of the bearing and tension on the other.

That's why it is important that only axial, radial and moment load components acting simultaneously define a single bearing-load case.

FBJ®

Slewing ring designation system

x	x	x	xx	xxxx
(1)	(2)	(3)	(4)	(5)

(1) - The types of products:
() - Ball type rotary fulcrum bearing
1 - Pin roller type rotary fulcrum bearing
(2) - The types of roll gang structure
1 - Single - row crosswise Pin roller type, single - row four - point contact ball type
2 - Double - row reducing ball type
3 - Three - row pin roller type
(3) - The types of transmission
() - Gearless type
1 - Involute cylindrical gear, external gearing minor modulus
2 - Involute cylindrical gear, external gearing, large modulus
3 - Involute cylindrical gear, internal gearing, minor modulus
4 - Involute cylindrical gear, internal gearing, large modulus
(4) - The rolling element:(steel ball or pin roller) diameter(mm)
(5) - The cylinder diameter of roll gangcentre:

Sample

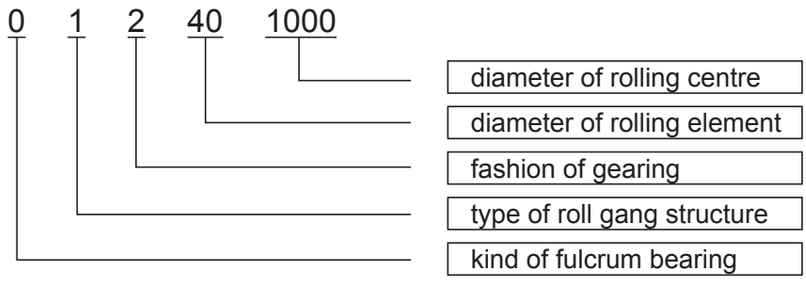

So, the specification of that Slewing ring is found as a single-row four point contact ball slewing ring (the modulus is larger). The diameter of steel ball is 40mm, cylinder diameter of roller gang center is 1000mm

The sample is the standard specifications of our products. Please associate with us to meet your special needs for non-standardized products

01 Series

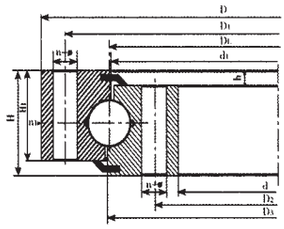

010

Single-row Four Point Contact Ball Slewing Ring

The single-row four point contact ball-type slewing bearing is comlosed of 2 seat rings. If features compact in design, light in weight, the balls contact with the circular race at four points, via which the axial force, radial force and tipping monent may be born simultaneously. It may be used for slewing conveyers, welding operating consoles, light, medium duty cranes, excavators and other engineering machines.

Load Diagram Number	Basic Type			Configuration size			Mounting size				Structural size					Gear Data			Ext Gear		Int Gear		Tangential Tooth load		Reference Weight kg
	Toothless D_L mm	Ext Toothing D_L mm	Int Toothing D_L mm	D mm	d mm	H mm	D_1 mm	D_2 mm	n	ϕ mm	n_1	D_3 mm	d_1 mm	H_1 mm	h mm	b mm	x	m mm	Z	D_a mm	Z	d_a mm	Normalization Z 10^4N	Heat Treatment T 10^4N	
1	010.30.500	011.30.500	013.30.500	602	398	80	566	434	20	18	4	501	498	70	10	60	+0.5	5	123	629	74	367	3.7	5.2	85
		012.30.500	014.30.500															6	102	628.8	62	368.4	4.5	6.2	
1'	010.25.500	011.25.500	013.25.500	602	398	80	566	434	20	18	4	501	499	70	10	60	+0.5	5	123	629	74	367	3.1	4.3	85
		012.25.500	014.25.500															6	102	628.8	62	368.4	3.8	5.2	
2	010.30.560	011.30.560	013.30.560	662	458	80	626	494	20	18	4	561	558	70	10	60	+0.5	5	135	689	86	427	3.7	5.2	95
		012.30.560	014.30.560															6	112	688.8	72	428.4	4.5	6.2	
2'	010.25.560	011.25.560	013.25.560	662	458	80	626	494	20	18	4	561	559	70	10	60	+0.5	5	135	689	86	427	3.1	4.3	95
		012.25.560	014.25.560															6	112	688.8	72	428.4	3.8	5.2	
3	010.30.630	011.30.630	013.30.630	732	528	80	696	564	24	18	4	631	628	70	10	60	+0.5	6	126	772.8	83	494.4	4.5	6.2	110
		012.30.630	014.30.630															8	94	774.4	62	491.2	6.0	8.3	
3'	010.25.630	011.25.630	013.25.630	732	528	80	696	564	24	18	4	631	629	70	10	60	+0.5	6	126	772.8	83	494.4	3.8	5.2	110
		012.25.630	014.25.630															8	94	774.4	62	491.2	5.0	6.9	
4	010.30.710	011.30.710	013.30.710	812	608	80	776	644	24	18	4	711	708	70	10	60	+0.5	6	139	850.8	96	572.4	4.5	6.2	120
		012.30.710	014.30.710															8	104	854.4	72	571.2	6.0	8.3	
4'	010.25.710	011.25.710	013.25.710	812	608	80	776	644	24	18	4	711	708	70	10	60	+0.5	6	139	850.8	96	572.4	3.8	5.2	120
		012.25.710	014.25.710															8	104	854.4	72	571.2	5.0	6.9	
5	010.40.800	011.40.800	013.40.800	922	678	100	878	722	30	22	6	801	798	90	10	80	+0.5	8	118	966.4	80	635.2	8.0	11.1	220
		012.40.800	014.40.800															10	94	968	64	634	10.0	14.0	
5'	010.30.800	011.30.800	013.30.800	922	678	100	878	722	30	22	6	801	798	90	10	80	+0.5	8	118	966.4	80	635.2	6.0	8.3	220
		012.30.800	014.30.800															10	94	968	64	634	7.5	10.5	
6	010.40.900	011.40.900	013.40.900	1022	778	100	978	822	30	22	6	901	898	90	10	80	+0.5	8	130	1062.4	93	739.2	8.0	11.1	240
		012.40.900	014.40.900															10	104	1068	74	734	10.0	14.0	
6'	010.30.900	011.30.900	013.30.900	1022	778	100	978	822	30	22	6	901	898	90	10	80	+0.5	8	130	1062.4	93	739.2	6.0	8.3	240
		012.30.900	014.30.900															10	104	1068	74	734	7.5	10.5	
7	010.40.1000	011.40.1000	013.40.1000	1122	878	100	1078	922	36	22	6	1001	998	90	10	80	+0.5	10	116	1188	83	824	10.0	14.0	270
		012.40.1000	014.40.1000															12	96	1185.6	69	820.8	12.0	16.7	
7'	010.30.1000	011.30.1000	013.30.1000	1122	878	100	1078	922	36	22	6	1001	998	90	10	80	+0.5	10	116	1188	83	824	12.5	10.5	270
		012.301000	014.30.1000															12	96	1185.6	69	820.8	9.0	12.5	
8	010.40.1120	011.40.1120	013.40.1120	1242	998	100	1198	1042	36	22	6	1121	1118	90	10	80	+0.5	10	127	1298	95	944	10.0	14.0	300
		012.40.1120	014.40.1120															12	106	1305.6	79	940.8	12.0	16.7	
8'	010.30.1120	011.30.1120	013.30.1120	1242	998	100	1198	1042	36	22	6	1121	1118	90	10	80	+0.5	10	127	1298	95	944	7.5	10.5	300
		012.30.1120	012.30.1120															12	106	1305.6	79	940.8	9.0	12.5	
9	010.45.1250	011.45.1250	013.45.1250	1390	1110	110	1337	1163	40	26	5	1252	1248	100	10	90	+0.5	12	118	1449.6	88	1048.8	13.5	18.8	420
		012.45.1250	014.45.1250															14	101	1453.2	75	1041.6	15.8	21.9	
9'	010.35.1250	011.35.1250	013.35.1250	1390	1110	110	1337	1163	40	26	5	1251	1248	100	10	90	+0.5	12	118	1449.6	88	1048.8	10.5	14.6	420
		012.35.1250	014.35.1250															14	101	1453.2	75	1041.6	12.3	17.0	
10	010.45.1400	011.45.1400	013.45.1400	1540	1260	110	1487	1313	40	26	5	1402	1398	100	10	90	+0.5	12	131	1605.6	100	1192.8	13.5	18.8	480
		012.45.1400	014.45.1400															14	112	1607.2	86	1195.6	15.8	21.9	
10'	010.35.1400	011.35.1400	013.35.1400	1540	1260	110	1487	1313	40	26	5	1401	1398	100	10	90	+0.5	12	131	1605.6	100	1192.8	10.5	14.6	480
		012.35.1400	014.35.1400															14	112	1607.2	86	1195.6	12.3	17.0	
11	010.45.1600	011.45.1600	013.45.1600	1740	1460	110	1687	1513	45	26	5	1602	1598	100	10	90	+0.5	14	127	1817.2	100	1391.6	15.8	21.9	550
		012.45.1600	014.45.1600															16	111	1820.8	87	1382.4	18.1	25.0	
11'	010.35.1600	011.35.1600	013.35.1600	1740	1460	110	1687	1513	45	26	5	1601	1598	100	10	90	+0.5	14	127	1817.2	100	1391.6	12.3	17.0	550
		012.35.1600	014.35.1600															16	111	1820.8	87	1382.4	14.1	19.4	
12	010.45.1800	011.45.1800	013.45.1800	1940	1660	110	1887	1713	45	26	5	1802	1798	100	10	90	+0.5	14	141	2013.2	113	1573.6	15.8	21.9	610
		012.45.1800	014.45.1800															16	123	2012.8	99	1574.4	18.1	25.0	
12'	010.35.1800	011.35.1800	013.35.1800	1940	1660	110	1887	1713	45	26	5	1801	1798	100	10	90	+0.5	14	141	2013.2	113	1573.6	12.3	17.0	610
		012.35.1800	014.35.1800															16	123	2012.8	99	1574.4	14.1	19.4	

FBJ®

Single-row Four Point Contact Ball Slewing Ring

01 Series

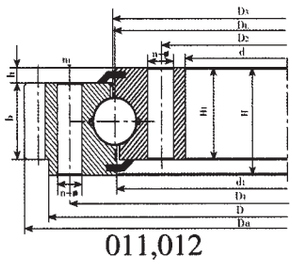

011,012

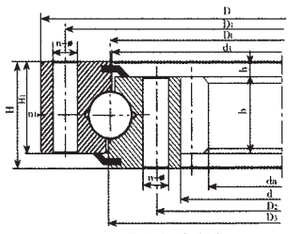

013,014

Load Diagram Number	Basic Type			Configuration size			Mounting size				Structural size					Gear Data			Ext Gear		Int Gear		Tangential Tooth load		Reference Weight kg
	Toothless D_L mm	Ext Toothing D_L mm	Int Toothing D_L mm	D mm	d mm	H mm	D_1 mm	D_2 mm	n	ϕ mm	n_1	D_3 mm	d_1 mm	H_1 mm	h mm	b mm	x	m mm	Z	D_a mm	Z	d_a mm	Normalization Z 10^4N	Heat Treatment T 10^4N	
13	010.60.2000	011.60.2000	013.60.2000	2178	1825	144	2110	1891	48	33	8	2002	1998	132	12	120	+0.5	16	139	2268.8	109	1734.4	24.1	33.3	1100
		012.60.2000	014.60.2000															18	123	2264.4	97	1735.2	27.1	37.5	
13'	010.40.2000	011.40.2000	013.40.2000	2178	1825	144	2110	1891	48	33	8	2001	1998	132	12	120	+0.5	16	139	2268.8	109	1734.4	16.1	22.2	1100
		012.40.2000	014.40.2000															18	123	2264.4	97	1735.2	18.1	25.0	
14	010.60.2240	011.60.2240	013.60.2240	2418	2065	144	2350	2131	48	33	8	2242	2238	132	12	120	+0.5	16	153	2492.8	125	1990.4	24.1	33.3	1250
		012.60.2240	014.60.2240															18	136	2498.4	111	1987.2	27.1	37.5	
14'	010.40.2240	011.40.2240	013.40.2240	2418	2065	144	2350	2131	48	33	8	2241	2238	132	12	120	+0.5	16	153	2492.8	125	1990.4	16.1	22.2	1250
		012.40.2240	014.40.2240															18	136	2498.4	111	1987.2	18.1	25.0	
15	010.60.2500	011.60.2500	013.60.2500	2678	2325	144	2610	2391	56	33	8	2502	2498	132	12	120	+0.5	18	151	2768.4	125	2239.2	27.1	37.5	1400
		012.60.2500	014.60.2500															20	136	2776	112	2228	30.1	41.8	
15'	010.40.2500	011.40.2500	013.40.2500	2678	2325	144	2610	2391	56	33	8	2501	2498	132	12	120	+0.5	18	151	2768.4	125	2239.2	18.1	25.0	1400
		012.40.2500	014.40.2500															20	136	2776	112	2228	20.1	27.9	
16	010.60.2800	011.60.2800	013.60.2800	2978	2625	144	2910	2691	56	33	8	2802	2798	132	12	120	+0.5	18	168	3074.4	141	2527.2	27.1	37.5	1600
		012.60.2800	014.60.2800															20	151	3076	127	2528	30.1	41.8	
16'	010.40.2800	011.40.2800	013.40.2800	2978	2625	144	2910	2691	56	33	8	2801	2798	132	12	120	+0.5	18	168	3074.4	141	2527.2	18.1	25.0	1600
		012.40.2800	014.40.2800															20	151	3076	127	2528	20.1	27.9	
17	010.75.3150	011.75.3150	013.75.3150	3376	2922	174	3286	3014	56	45	8	3152	3147	162	12	150	+0.5	20	171	3476	142	2828	37.7	52.2	2800
		012.75.3150	014.75.3150															22	155	2471.6	129	2824.8	41.5	57.4	
17'	010.50.3150	011.50.3150	013.50.3150	3376	2922	174	3286	3014	56	45	8	3152	3148	162	12	150	+0.5	20	171	3476	142	2828	25.1	34.8	2800
		012.50.3150	014.50.3150															22	155	3471.6	129	2824.8	27.7	38.3	
18	010.75.3550	011.75.3550	013.75.3550	3776	3322	174	3686	3414	56	45	8	3552	3547	162	12	150	+0.5	20	191	3876	162	3228	37.7	52.2	3200
		012.75.3550	014.75.3550															22	174	3889.6	147	3220.8	41.5	57.4	
18'	010.50.3550	011.50.3550	013.50.3550	3776	3322	174	3686	3414	56	45	8	3552	3548	162	12	150	+0.5	20	191	3876	162	3228	25.1	34.8	3200
		012.50.3550	014.50.3550															22	174	3889.6	147	3220.8	27.7	38.3	
19	010.75.4000	011.75.4000	013.75.4000	4226	3772	174	4136	3864	60	45	10	4002	3997	162	12	150	+0.5	22	194	4329.6	167	3660.8	41.5	57.4	3600
		012.75.4000	014.75.4000															25	171	4345	147	3660	47.1	65.2	
19'	010.50.4000	011.50.4000	013.50.4000	4226	3772	174	4136	3864	60	45	10	4002	3998	162	12	150	+0.5	22	194	4329.6	167	3660.8	27.7	38.3	3600
		012.50.4000	014.50.4000															25	171	4345	147	3660	31.4	43.5	
20	010.75.4500	011.75.4500	013.75.4500	4726	4272	174	4636	4364	60	45	10	4502	4497	162	12	150	+0.5	22	217	4835.6	190	4166.8	41.5	57.4	4000
		012.75.4500	014.75.4500															25	191	4845	167	4160	47.1	65.2	
20'	010.50.4500	011.50.4500	013.50.4500	4726	4272	174	4636	4364	60	45	10	4502	4498	162	12	150	+0.5	22	217	4835.6	190	4166.8	27.7	38.3	4000
		012.50.4500	014.50.4500															25	191	4845	167	4160	31.4	43.5	

Notes :

1. n_1-number of lubricating holes, evenly distributed, oil cup M10x1, GB1152～1153-89.
2. Mounting hole n-ϕ, may be replaced with screw hole, tooth width may be taken as H-h.
3. Gear force of periphery given in the table is its maximum value, nominal force of periphery is taken 1/2 of the given value.
4. The trim top coefficient of outer and inner tooth is 0.1 and 0.2, respectively.

11 Series

Single-row Cross Roller Slewing Ring

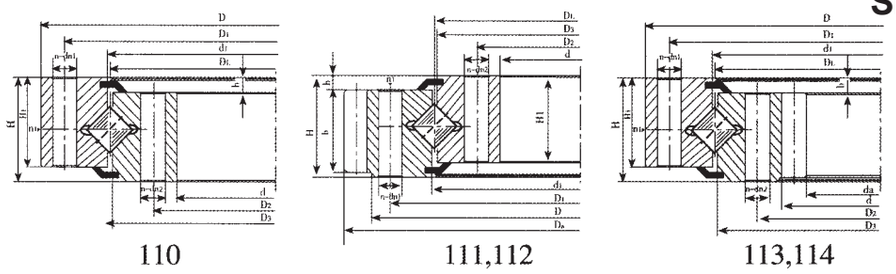

110 111,112 113,114

Single-row cross roller bearing comprises two seat-rings. It features compact in design, light in weight, high precision and small fitting clearance. As the roller are 1:1 cross arranged, it is suitable for high precision muoting and capable to bear axial force, tipping moment and considerable large radial force. The single-row cross roller slewing bearing are widely used for hoisting, transporting, engineering machines as well as for military products.

Load Diagram Number	Basic Type			Configuration size			Mounting size				Structural size					Gear Data			Ext Gear		Int Gear		Tangential Tooth load		Reference Weight kg
	Toothless D1 mm	Ext Toothing D1 mm	Int Toothing D1 mm	D mm	d mm	H mm	D_1 mm	D_2 mm	n	dn_1 dn_2 mm	n_1	D_3 mm	d_1 mm	H_1 mm	h mm	b mm	x	m mm	Z	D_a mm	Z	d_a mm	Normalization Z 10^4N	Heat Treatment T 10^4N	
1	110.25.500	111.25.500	113.25.500	602	398	75	566	434	20	18	4	498	502	65	10	60	+0.5	5	123	629	74	367	3.7	5.2	80
		112.25.500	114.25.500															6	102	628.8	62	368.4	4.5	6.2	
2	110.25.560	111.25.560	113.25.560	662	458	75	626	494	20	18	4	558	562	65	10	60	+0.5	5	135	689	86	427	3.7	5.2	90
		112.25.560	114.25.560															6	112	688.8	72	428.4	4.5	6.2	
3	110.25.630	111.25.630	113.25.630	732	528	75	696	564	24	18	4	628	632	65	10	60	+0.5	6	126	772.8	83	494.4	4.5	6.2	100
		112.25.630	114.25.630															8	94	774.4	62	491.2	6.0	8.3	
4	110.25.710	111.25.710	113.25.710	812	608	75	776	644	24	18	4	708	712	65	10	60	+0.5	6	139	850.8	96	572.4	4.5	6.2	110
		112.25.710	114.25.710															8	104	854.4	72	571.2	6.0	8.3	
5	110.28.800	111.28.800	113.28.800	922	678	82	878	722	30	22	6	798	802	72	10	65	+0.5	8	118	966.4	80	635.2	6.5	9.1	170
		112.28.800	114.28.800															10	94	968	64	634	8.1	11.4	
6	110.28.900	111.28.900	113.28.900	1022	778	82	978	822	30	22	6	898	902	72	10	65	+0.5	8	130	1062.4	93	739.2	6.5	9.1	190
		112.28.900	114.28.900															10	104	1068	74	734	8.1	11.4	
7	110.28.1000	111.28.1000	113.28.1000	1122	878	82	1078	922	36	22	6	998	1002	72	10	65	+0.5	10	116	1188	83	824	8.1	11.4	210
		112.28.1000	114.28.1000															12	96	1185.6	69	820.8	9.7	13.6	
8	110.28.1120	111.28.1120	113.28.1120	1242	998	82	1198	1042	36	22	6	1118	1122	72	10	65	+0.5	10	127	1298	95	944	8.1	11.4	230
		112.28.1120	114.28.1120															12	106	1305.6	79	940.8	9.7	13.6	
9	110.32.1150	111.32.1150	113.32.1150	1390	1110	91	1337	1163	40	26	5	1248	1252	81	10	75	+0.5	12	118	1449.6	88	1048.8	11.3	15.7	350
		112.32.1150	114.32.1150															14	101	1453.2	75	1041.6	13.2	18.2	
10	110.32.1400	111.32.1400	113.32.1400	1540	1260	91	1487	1313	40	26	5	1398	1402	81	10	75	+0.5	12	131	1605.6	100	1192.8	11.3	15.7	400
		112.32.1400	114.32.1400															14	112	1607.2	86	1195.6	13.2	18.2	
11	110.32.1600	111.32.1600	113.32.1600	1740	1460	91	1687	1513	45	26	5	1598	1602	81	10	75	+0.5	14	127	1817.2	100	1391.6	13.2	18.2	440
		112.32.1600	114.32.1600															16	111	1820.8	87	1382.4	15.1	22.4	
12	110.32.1800	111.32.1800	113.32.1800	1940	1660	91	1887	1713	45	26	5	1798	1802	81	10	75	+0.5	14	141	2013.2	113	1573.6	13.2	18.2	500
		112.32.1800	114.32.1800															16	123	2012.8	99	1574.4	15.1	22.4	
13	110.40.2000	111.40.2000	113.40.2000	2178	1825	112	2110	1891	48	33	8	1997	2003	100	12	90	+0.5	16	139	2268.8	109	1734.4	18.1	25.0	900
		112.40.2000	114.40.2000															18	123	2264.4	97	1735.2	20.3	28.1	
14	110.40.2240	111.40.2240	113.40.2240	2418	2065	112	2350	2131	48	33	8	2237	2243	100	12	90	+0.5	16	153	2492.8	125	1990.4	18.1	25.0	1000
		112.40.2240	114.40.2240															18	136	2498.4	111	1987.2	20.3	28.1	
15	110.40.2500	111.40.2500	113.40.2500	2678	2325	112	2610	2391	56	33	8	2497	2503	100	12	90	+0.5	18	151	2768.4	1245	2249.2	20.3	28.1	1100
		112.40.2500	114.40.2500															20	136	2776	112	2228	22.6	31.3	
16	110.40.2800	111.40.2800	113.40.2800	2978	2625	112	2910	2691	56	33	8	2797	2803	100	12	90	+0.5	18	168	3074.4	141	2527.2	20.3	28.1	1250
		112.40.2800	114.40.2800															20	151	3076	127	2528	22.6	31.3	
17	110.50.3150	110.50.3150	113.50.3150	3376	2922	134	3286	3014	56	45	8	3147	3153	122	12	110	+0.5	20	171	3476	142	2828	27.6	38.3	2150
		112.50.3150	114.50.3150															22	155	3471.6	129	2824.8	30.4	42.1	
18	110.50.3550	111.50.3550	113.50.3550	3776	3322	134	3686	3414	56	45	8	3547	3553	122	12	110	+0.5	20	191	3876	162	3228	27.6	38.3	2470
		112.50.3550	114.50.3550															22	174	3889.6	147	3220.8	30.4	42.1	
19	110.50.4000	111.50.4000	113.50.4000	4226	3772	134	4136	3864	60	45	10	3997	4003	122	12	110	+0.5	22	194	4329.6	167	3660.8	30.4	42.1	2800
		112.50.4000	114.50.4000															25	171	4345	147	3660	34.5	47.8	
20	110.50.4500	111.50.4500	113.50.4500	4726	4272	134	4636	4364	60	45	10	4497	4503	122	12	110	+0.5	22	217	4835.6	190	4166.8	30.4	42.1	3100
		112.50.4500	114.50.4500															25	191	4845	167	4160	34.5	47.8	

Notes :

1. n_1-number of lubricating holes, evenly distributed, oil cup M10x1, GB1152～1153-89.
2. Mounting hole n-ϕ, may be replaced with screw hole, tooth width may be taken as H-h.
3. Gear force of periphery given in the table is its maximum value, nominal force of periphery is taken 1/2 of the given value.
4. The trim top coefficient of outer and inner tooth is 0.1 and 0.2, respectively.

FBJ®

Three-row Roller Slewing Ring

13 Series

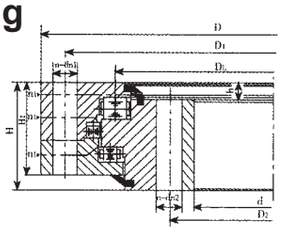

130

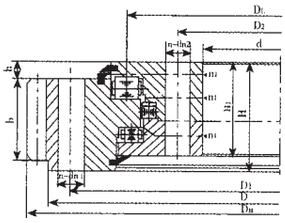

131,132

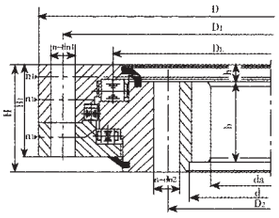

133,134

Three-row roller slewing bearing has three seat-rings, which separate the upper, lower and radial races, via which the load of each row of the rollers may be specified. It may bear different loads simultaneously and its load capacity is the largest one among the four models.

It is especially suitable for heavy-duty machines which require large working redius, such as bucket-wheel excavators, wheeled cranes, ship cranes, heavy-duty mobil cranes ect.

Load Diagram Number	Basic Type			Configuration size			Mounting size				Structural size			Gear Data			Ext Gear		Int Gear		Tangential Tooth load		Reference Weight kg
	Toothless D_L mm	Ext Toothing D_L mm	Int Toothing D_L mm	D mm	d mm	H mm	D_1 mm	D_2 mm	n	dn_1 dn_2 mm	n_1	H_1 mm	h mm	b mm	x	m mm	Z	D_a mm	Z	d_a mm	Normalization Z 10^4N	Heat Treatment T 10^4N	
1	130.25.500	131.25.500	133.25.500	634	366	148	598	402	24	18	4	138	32	80	+0.5	5	130	664	68	337	5.0	6.7	224
		132.25.500	134.25.500													6	108	664.8	57	338.4	6.0	8.0	
2	130.25.560	131.25.560	133.25.560	694	426	148	658	462	24	18	4	138	32	80	+0.5	5	142	724	80	397	5.0	6.7	240
		132.25.560	134.25.560													6	118	724.8	67	398.4	6.0	8.0	
3	130.25.630	131.25.630	133.25.630	764	496	148	728	532	28	18	4	138	32	80	+0.5	6	132	808.8	77	458.4	6.0	8.0	270
		132.25.630	134.25.630													8	98	806.4	58	459.2	8.0	11.0	
4	130.25.710	131.25.710	133.25.710	844	576	148	808	612	28	18	4	138	32	80	+0.5	6	145	886.8	90	536.4	6.0	8.0	300
		132.25.710	134.25.710													8	108	886.4	68	539.2	8.0	11.0	
5	130.32.800	131.32.800	133.32.800	964	636	182	920	680	36	22	4	172	40	120	+0.5	8	123	1006.4	75	595.2	12.1	16.7	500
		132.32.800	134.32.800													10	98	1008	60	594	15.1	20.9	
6	130.32.900	131.32.900	133.32.900	1064	736	182	1020	780	36	22	4	172	40	120	+0.5	8	135	1102.4	87	691.2	12.1	16.7	600
		132.32.900	134.32.900													10	108	1108	70	694	15.1	20.9	
7	130.32.1000	131.32.1000	133.32.1000	1164	836	182	1120	880	40	22	5	172	40	120	+0.5	10	119	1218	79	784	15.1	20.9	680
		132.32.1000	134.32.1000													12	99	1221.6	66	784.8	18.1	25.1	
8	130.32.1120	131.32.1120	133.32.1120	1284	956	182	1240	1000	40	22	5	172	40	120	+0.5	10	131	1338	91	904	15.1	20.9	820
		132.32.1120	134.32.1120													12	109	1341.6	76	904.8	18.1	25.1	
9	130.40.1250	131.40.1250	133.40.1250	1445	1055	220	1393	1107	45	26	5	210	50	150	+0.5	12	123	1509.6	83	988.8	22.9	31.4	1200
		132.40.1250	134.40.1250													14	105	1509.2	71	985.6	26.3	36.6	
10	130.40.1400	131.40.1400	133.40.1400	1595	1205	220	1543	1257	45	26	5	210	50	150	+0.5	12	136	1665.6	96	1144.8	22.9	31.4	1300
		132.40.1400	134.40.1400													14	116	1663.2	82	1139.6	26.3	36.6	
11	130.40.1600	131.40.1600	133.40.1600	1795	1405	220	1743	1457	48	26	6	210	50	150	+0.5	14	131	1873.2	96	1335.6	26.3	36.6	1520
		132.40.1600	134.40.1600													16	114	1868.8	84	1334.4	30.2	41.7	
12	130.40.1800	131.40.1800	133.40.1800	1995	1605	220	1943	1657	48	26	6	210	50	150	+0.5	14	145	2069.2	110	1531.6	26.3	36.6	1750
		132.40.1800	134.40.1800													16	127	2076.8	96	1526.4	30.2	41.7	
13	130.45.2000	131.45.2000	133.45.2000	2221	1779	231	2155	1845	60	33	6	219	54	160	+0.5	16	141	2300.8	107	1702.4	32.2	44.5	2400
		132.45.2000	134.45.2000													18	125	2300.4	95	1699.2	36.2	50.1	
14	130.45.2240	131.45.2240	133.45.2240	2461	2019	231	2395	2085	60	33	6	219	54	160	+0.5	16	157	2556.8	121	1926.4	32.2	44.5	2700
		132.45.2240	134.45.2240													18	139	2552.4	108	1933.2	36.2	50.1	
15	130.45.2500	131.45.2500	133.45.2500	2721	2279	231	2655	2345	72	33	8	219	54	160	+0.5	18	154	2822.4	122	2185.2	36.2	50.1	3000
		132.45.2500	134.45.2500													20	138	2816	110	2188	40.2	55.6	
16	130.45.2800	131.45.2800	133.45.2800	3021	2579	231	2955	2645	72	33	8	219	54	160	+0.5	18	170	3110.4	139	2491.2	36.2	50.1	3400
		132.45.2800	134.45.2800													20	153	3116	125	2488	40.2	55.6	
17	130.50.3150	131.50.3150	133.50.3150	3432	2868	270	3342	2958	72	45	8	258	65	180	+0.5	20	174	3536	139	2768	45.2	62.6	5000
		132.50.3150	134.50.3150													22	158	3537.6	126	2758.8	49.8	68.9	
18	130.50.3550	131.50.3550	133.50.3550	3832	3268	270	3742	3358	72	45	8	258	65	180	+0.5	20	194	3936	159	3168	45.2	62.6	5600
		132.50.3550	134.50.3550													22	176	3933.6	144	3154.8	49.8	68.9	
19	130.50.4000	131.50.4000	133.50.4000	4282	3718	270	4192	3808	80	45	8	258	65	180	+0.5	22	197	4395.6	165	3616.8	49.8	68.9	6400
		132.50.4000	134.50.4000													25	173	4395	145	3610	56.5	78.3	
20	130.50.4500	131.50.4500	133.50.4500	4782	4218	270	4692	4308	80	45	8	258	65	180	+0.5	22	220	4901.6	188	4122.8	49.8	68.9	7100
		132.50.4500	134.50.4500													25	193	4895	165	4110	56.5	78.3	

Notes :

1. n_1-number of lubricating holes, evenly distributed, oil cup M10x1, GB1152～1153-89.
2. Mounting hole n-ϕ, may be replaced with screw hole, tooth width may be taken as H-h.
3. Gear force of periphery given in the table is its maximum value, nominal force of periphery is taken 1/2 of the given value.
4. The trim top coefficient of outer and inner tooth is 0.1 and 0.2, respectively.

HS Series

Single-row Four Point Contact Slewing Ring

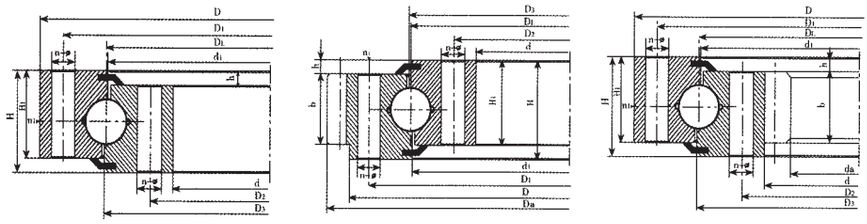

HSB HSW HSN

The single-row four point contact ball-type slewing bearing is composed of 2 seat-rings. It features compact in design, light in weight, the balls contact with the circular race at four points, via which the axial force, radial force and tipping monent may be born simultaneously. It may be used for slewing conveyers, welding operating consoles, light, medium duty cranes, excavators and engineering machines.

Load Diagram Number	Basic Type			Configuration size			Mounting size				Structural size					Gear Data		Ext Gear			Int Gear			Tangential Tooth load		Reference Weight kg
	Toothless D_L mm	Ext Toothing D_L mm	Int Toothing D_L mm	D mm	d mm	H mm	D_1 mm	D_2 mm	n	ϕ mm	n_1	D_3 mm	d_1 mm	H_1 mm	h mm	b mm	m mm	x	Z	D_a mm	x	Z	d_a mm	Normalization Z 10^4N	Heat Treatment T 10^4N	
1	HSB.25.625	HSW.25.625	HSN.25.625	725	525	80	685	565	18	18	3	626	624	68	12	60	5	+1.4	146	751.9	+0.35	101	498.8		5.2	100
		HSW.25.625A	HSN.25.625A														6	+1.15	122	755.5	+0.35	84	496.7		6.2	
2	HSB.25.720	HSW.25.720	HSN.25.720	820	620	80	780	660	18	18	3	721	719	68	12	60	6	+1.4	139	860.3	+0.35	99	586.6		6.2	120
		HSW.25.720A	HSN.25.720A														8	+1.0	104	861.1	+0.35	74	582.3		8.3	
3	HSB.30.820	HSW.30.820	HSN.30.820	940	705	95	893	749	24	20	4	821	818	83	12	70	6	+1.4	159	980.6	+0.35	112	664.5		7.2	210
		HSW.30.820A	HSN.30.820A														10	+1.0	95	986.2	+0.35	67	658.0		12.2	
4	HSB.30.880	HSW.30.880	HSN.30.880	1000	760	95	956	800	24	20	4	881	878	83	12	70	8	+1.15	127	1047.5	+0.35	91	718.2		9.7	230
		HSW.30.880A	HSN.30.880A														10	+1.0	101	1046.3	+0.35	72	707.9		12.2	
5	HSB.30.1020	HSW.30.1020	HSN.30.1020	1170	875	95	1120	930	24	22	4	1021	1018	80	15	70	8	+1.4	148	1219.3	+0.35	105	830.1		9.7	300
		HSW.30.1020A	HSN.30.1020A														10	+1.15	118	1219.2	+0.35	84	827.8		12.2	
6	HSB.30.1220	HSW.30.1220	HSN.30.1220	1365	1075	120	1310	1130	36	24	6	1221	1218	105	15	90	10	+1.4	138	1424.9	+0.35	104	1027.8		15.7	450
		HSW.30.1220A	HSN.30.1220A														12	+1.0	116	1435.9	+0.35	86	1017.3		18.8	
7	HSB.35.1250	HSW.35.1250	HSN.35.1250	1400	1090	120	1350	1150	36	26	6	1251	1248	105	15	90	10	-0.35	143	1443	+0.35	105	1037		15.7	520
		HSW.35.1250A	HSN.35.1250A														12	+1.0	117	1449.6	+0.35	86	1021.2		18.8	
8	HSB.35.1435	HSW.35.1435	HSN.35.1435	1595	1278	120	1535	1335	36	26	6	1436	1433	105	15	90	12	+1.15	134	1655.5	+0.35	103	1221.2		18.8	610
		HSW.35.1435A	HSN.35.1435A														14	+1.0	115	1661.2	+0.35	88	1214.8		21.9	
9	HSB.35.1540	HSW.35.1540	HSN.35.1540	1720	1360	140	1660	1420	42	26	6	1541	1538	122	18	110	12	+1.4	144	1780.8	+0.35	109	1293.1		23.0	732
		HSW.35.1540A	HSN.35.1540A														14	+1.15	124	1791.1	+0.35	93	1284.8		26.8	
10	HSB.35.1700	HSW.35.1700	HSN.35.1700	1875	1525	140	1815	1585	42	29	6	1701	1698	122	18	110	14	+1.15	135	1945.4	+0.35	105	1452.7		26.8	844
		HSW.35.1700A	HSN.35.1700A														16	+1.15	118	1950.8	+0.35	92	1452.3		30.5	
11	HSB.40.1880	HSW.40.1880	HSN.40.1880	2100	1665	160	2030	1740	48	32	6	1881	1878	140	20	115	14	+1.4	152	2189.8	+0.35	115	1592.6		27.8	1400
		HSW.40.1880A	HSN.40.1880A														18	+1.15	118	2194.6	+0.35	89	1579.9		35.8	
12	HSB.40.2115	HSW.40.2115	HSN.40.2115	2325	1900	160	2245	1980	48	32	6	2116	2113	140	20	115	16	+1.4	146	2406.5	+0.35	114	1804.1		31.9	1600
		HSW.40.2115A	HSN.40.2115A														20	+1.15	117	2418.4	+0.35	91	1795.4		40.0	
13	HSB.40.2370	HSW.40.2370	HSN.40.2370	2600	2146	180	2520	2220	48	32	6	2371	2368	158	22	130	18	+1.4	146	2707.3	+0.35	116	2065.6		40.7	2100
		HSW.40.2370A	HSN.40.2370A														22	+1.15	119	2704.4	+0.35	94	2040.9		49.7	
14	HSB.40.2660	HSW.40.2660	HSN.40.2660	2835	2365	180	2750	2450	54	36	6	2601	2598	158	22	130	18	+1.4	159	2941.7	+0.35	127	2263.5		37.6	2400
		HSW.40.2660A	HSN.40.2660A														22	+1.15	130	2946.9	+0.35	104	2260.8		45.9	
15	HSB.50.2820	HSW.50.2820	HSN.50.2820	3085	2555	200	3000	2640	54	36	6	2822	2818	178	22	150	20	+1.4	155	3188.4	+0.35	124	2455		52.2	3400
		HSW.50.2820A	HSN.50.2820A														25	+1.15	124	3198.4	+0.35	99	2444.1		65.3	
16	HSB.50.3120	HSW.50.3120	HSN.50.3120	3400	2840	200	3310	2930	54	36	6	3122	3118	178	22	150	22	+1.4	155	3507.2	+0.35	125	2722.5		57.4	4000
		HSW.50.3120A	HSN.50.3120A														25	+1.4	136	3509.6	+0.35	110	2719		65.3	
17	HSB.50.3580	HSW.50.3580	HSN.50.3580	3920	3240	240	3820	3340	60	40	6	3582	3578	218	22	190	22	+1.4	179	4036.1	+0.35	143	3118.4		72.7	6700
		HSW.50.3580A	HSN.50.3580A														25	+1.4	157	4035.6	+0.35	126	3118.8		82.6	
18	HSB.50.4030	HSW.50.4030	HSN.50.4030	4370	3590	240	4270	3790	66	40	6	4032	4028	218	22	190	22	+1.4	201	4520.6	+0.35	163	3558.3		53.6	7700
		HSW.50.4030A	HSN.50.4030A														28	+1.4	157	4522.4	+0.35	128	3549.0		68.2	
19	HSB.50.4540	HSW.50.4540	HSN.50.4540	4860	4210	240	4760	4310	72	40	6	4542	4538	218	22	190	22	+1.4	222	4983.1	+0.35	185	4042.2		72.1	8760
		HSW.50.4540A	HSN.50.4540A														30	+1.4	162	4992.9	+0.35	136	4042.4		99.1	

Notes :

1. n_1-number of lubricating holes, evenly distributed, oil cup M10x1, GB1152～1153-89.
2. Mounting hole n-ϕ, may be replaced with screw hole, tooth width may be taken as H-h.
3. Gear force of periphery given in the table is its maximum value, nominal force of periphery is taken 1/2 of the given value.

FBJ®

Single-row Contact Ball Slewing Ring

QN, QW Series

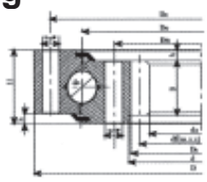

QN Series, type A

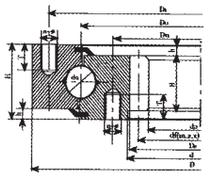

QN Series, type B

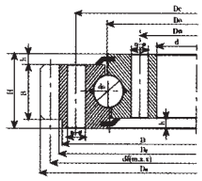

QW Series, type A

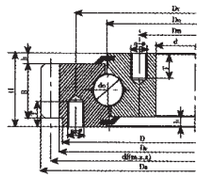

QW Series, type B

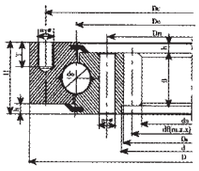

QN Series, type C

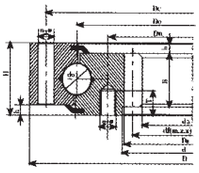

QN Series, type D

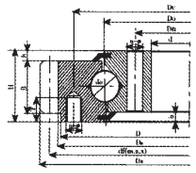

QW Series, type C

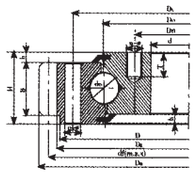

QW Series, type D

No.	Basic Number	Configuration size						Mounting size						Gear Data						Weight kg	
		Ext Toothing		Int Toothing		H	h	Du	Dn	n	A	B.C.D		m	B	Ext Toothing X=-0.5		Int Toothing X=+0.5		Ext Toothing	Int Toothing
	QW, QN	D	d	D	d						ϕ	d1	T			Z	Da	Z	da	Gw	Gn
1	315.20	406	222	408	224	60	10	370	260	10	17	M16	24	3	40	140	423	70	207	35	34
	315.20A													4	40	106	428	51	200	36	35
2	355.20	446	262	448	264	60	10	410	300	10	17	M16	24	3	40	153	462	84	246	40	39
	355.20A													4	40	116	468	61	240	41	40
3	400.20	490	307	493	310	60	10	455	345	12	17	M16	24	4	40	127	512	73	288	45	44
	400.20A													5	40	103	520	57	280	47	46
4	450.20	540	357	543	360	60	10	505	395	12	17	M16	24	4	40	140	564	85	336	51	50
	450.20A													5	40	113	570	67	330	53	52
5	500.20	590	407	593	410	60	10	555	445	14	17	M16	24	5	40	122	615	78	385	56	55
	500.20A													6	40	103	624	64	378	58	57
6	560.20	654	464	656	468	70	10	618	502	14	17	M16	24	4	50	169	680	111	440	78	76
	560.20A													5	50	136	685	88	435	79	77
7	630.20	724	534	726	538	70	10	688	572	16	17	M16	24	4	50	186	748	129	512	86	84
	630.20A													5	50	150	755	102	505	88	86
8	710.20	804	614	806	618	70	10	768	652	18	17	M16	24	5	50	166	835	118	585	99	97
	710.20A													6	50	139	840	98	582	101	97
9	800.20	894	704	896	708	70	10	858	742	20	17	M16	24	6	50	154	930	113	672	114	110
	800.20A													8	50	116	936	84	664	114	111
10	800.25	904	692	908	694	78	10	864	736	18	21	M20	30	6	58	156	942	110	654	143	142
	800.25A													8	58	118	952	82	648	147	142
11	900.25	1004	792	1008	794	78	10	964	836	20	21	M20	30	8	58	130	1048	94	744	162	163
	900.25A													10	58	105	1060	75	740	168	162
12	1000.25	1104	892	1108	894	78	10	1064	936	24	21	M20	30	8	58	143	1152	107	848	182	178
	1000.25A													10	58	115	1160	85	840	185	179
13	1000.32	1120	876	1124	880	90	10	1074	926	24	24	M22	35	8	70	144	1160	105	832	227	230
	1000.32A													10	70	116	1170	84	830	232	227
14	1120.32	1240	996	1244	1000	90	10	1194	1046	28	24	M22	35	10	70	129	1300	95	940	272	263
	1120.32A													12	70	108	1308	79	936	275	262
15	1250.32	1370	1126	1374	1130	90	10	1324	1176	32	24	M22	35	10	70	142	1430	108	1070	302	294
	1250.32A													12	70	119	1440	90	1068	309	290
16	1400.32	1520	1276	1524	1280	90	10	1474	1326	36	24	M22	35	12	70	131	1584	102	1212	337	333
	1400.32A													14	70	113	1596	87	1204	347	336
17	1250.40	1390	1108	1394	1110	102	12	1336	1164	32	26	M24	40	10	80	144	1450	106	1050	396	388
	1250.40A													12	80	120	1452	88	1044	392	388
18	1400.40	1540	1258	1544	1260	102	12	1486	1314	36	26	M24	40	12	80	133	1608	100	1188	448	444
	1400.40A													14	80	114	1610	86	1190	443	434
19	1600.40	1740	1458	1744	1460	102	12	1686	1514	40	26	M24	40	12	80	150	1812	117	1392	528	509
	1600.40A													14	80	129	1820	100	1386	534	511
20	1800.40	1940	1658	1944	1660	102	12	1886	1714	44	26	M24	40	14	80	143	2016	114	1582	583	576
	1800.40A													16	80	126	2032	99	1568	607	591
21	1600.50	1762	1434	1766	1438	124	12	1704	1496	40	29	M27	45	12	100	151	1824	115	1368	714	714
	1600.50A													14	100	130	1834	98	1358	727	723
22	1800.50	1964	1634	1966	1638	124	12	1904	1696	44	29	M27	45	14	100	145	2044	113	1568	845	794
	1800.50A													16	100	127	2048	98	1552	843	818
23	2000.50	2162	1834	2166	1842	124	12	2104	1896	48	29	M27	45	16	100	139	2240	111	1760	912	891
	2000.50A													18	100	124	2250	98	1746	927	913
24	2240.50	2402	2074	2406	2078	124	12	2344	2136	54	29	M27	45	16	100	154	2480	125	1984	1020	1044
	2240.50A													18	100	138	2502	111	1980	1078	1041
25	2500.50	2662	2334	2666	2342	124	12	2604	2396	60	29	M27	45	18	100	152	2754	126	2250	1171	1032
	2500.50A													20	100	137	2760	113	2240	1175	1048
26	2500.60	2696	2304	2696	2308	150	14	2626	2374	60	32	M30	50	18	122	154	2790	124	2214	1677	1021
	2500.60A													20	122	139	2800	111	2200	1701	1054

Pillow Block
Basic Structure

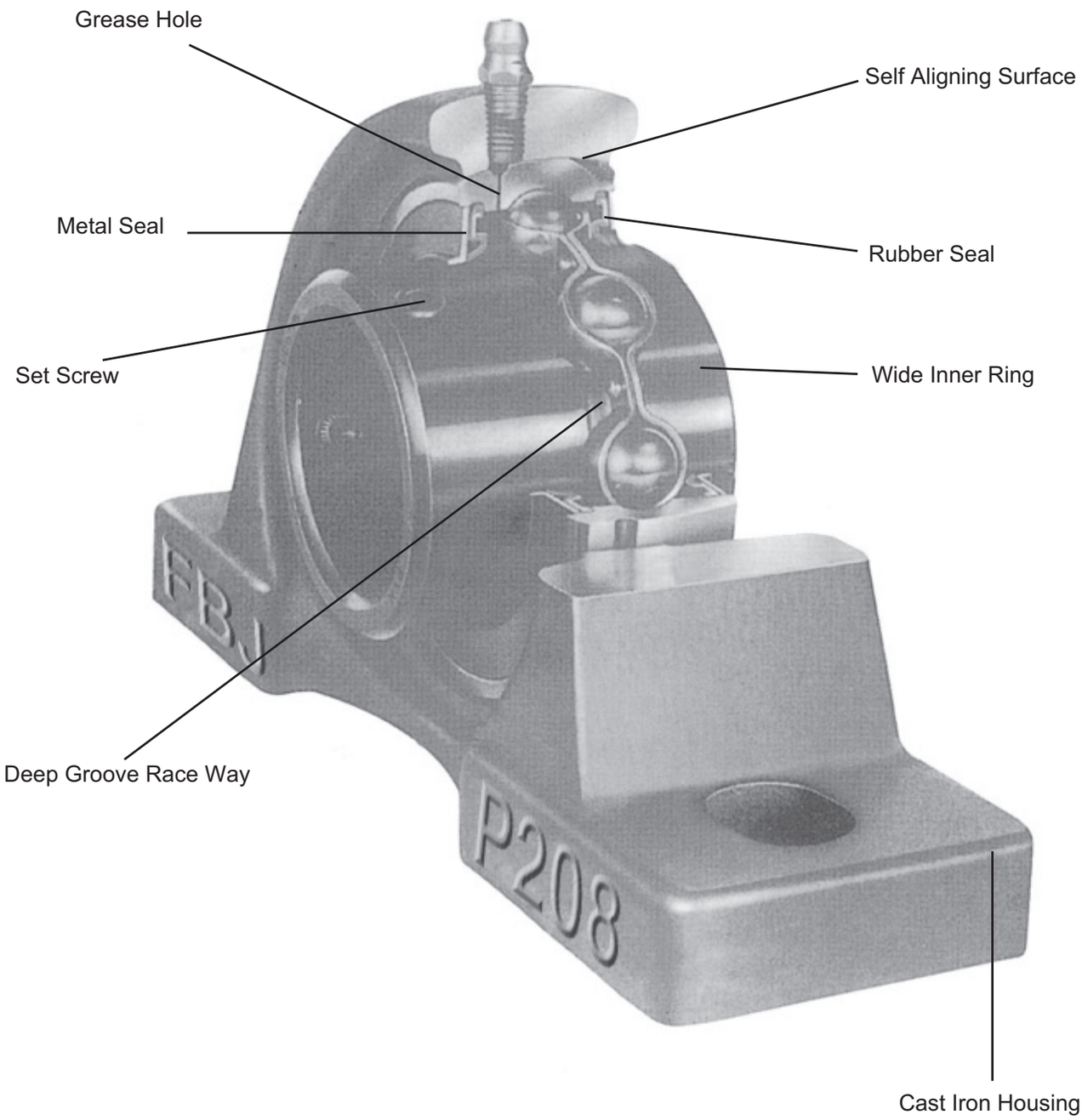

1. BASIC STRUCTURE OF FBJ PILLOW BLOCKS

1.1. FBJ Bearing units

The FBJ range of bearing units offer a wide choice of Cast Iron, Pressed Steel or Thermo – Plastic housings fitted with the full, range of bearing inserts, with spherical outer diameter and some with cylindrical outer diameter.

The general housing types are Pillow blocks, Flange units, Hanger Units, Cartridge units and Take-Up units. Choice is very much determined by the requirements of the application, although the aesthetic appearance of the machine design is often an important consideration. Self-Lube units have been designed to meet the needs of both criteria.

The castings are made from high-quality Gray cast iron (JIS, G5501) and finished on all un-machined surfaces with standard dimensions. Pressed steel housings are made from mild steel strips (JIS, 3141) and are zinc plated. In corrosive environment and Food industry, it is recommended to use Thermo – Plastic housings (VALOX 420) with Stainless Steel Bearing inserts.

1.2 FBJ Bearing inserts

The FBJ bearing insert, commonly known as a wide inner ring bearings, is designed to suit the wide range, of housings. FBJ bearing inserts also suitable for applications where the users own housing is preferred.

Bearing inserts are basically deep-groove ball bearings to the internationally popular 6, series configuration with integral design features making them more functional and versatile than the standard ball bearing. They are offered with either parallel or spherical outside diameter outer rings with the latter being the type fitted as standard in the bearing unit.

The integral design features of the bearing insert are such as shaft locking, seals and re-lubrication.

The inner rubber seals are firmly assembled on the outer ring and ensure perfect sealing of grease chamber. The steel shield or slingers rotate with inner ring and generate centrifugal force, by means of which dust is efficiently excluded.

FBJ offer two types of material for bearing insert, High Carbon Chromium Bearing Steel and Stainless Steel.

2. BEARING MATERIAL AND OPERATING TEMPERATURE

2.1 BEARING MATERIAL

The performance of a rolling bearing is highly influenced by the material used. For FBJ Pillow Block either vacuum degassed High Carbon Chromium Bearing Steel or Stainless Steel use as the material for bearing insert and Gray Cast Iron, Sheet Steel or Thermo Plastic for the housing.

Materials used for FBJ High Carbon Chromium Bearing Steel bearing insert and Cast Iron Housing Bearing Units

Table 2.1.1

Component	MATERIALS USED	JIS	
		SYMBOL	NUMBER
Ball, Inner Ring and Outer Ring	High Carbon Chromium Bearing Steel	SUJ 2	G 4805
Cage and shield	Cold rolled steel sheets or strips	SPCC	G 3141
Seal	Nitrile rubber	-	-
Set Screw	Nickel Chromium Molybdenum Steel	SCM 435	G 4105
Sleeve and Nut (For Adapter)	Mild Steel	S 25 C	G 4051
Washer (For Adapter)	Cold rolled steel sheets or strips	SPCC	G 3141
Grease Nipple	Free Cutting Brass Bar	C 3604	H 3250
Housing	Gray Cast Iron	FC 200	G 5501

Materials used for FBJ Stainless Steel Bearings bearing insert and Thermo Plastic Housing Bearing Units

Table 2.1.2

Component	MATERIALS USED	JIS SYMBOL
Ball, Inner Ring and Outer Ring	Stainless Steel	SUS440C
Cage and shield	Stainless Steel	SUS304
Seal	Nitrile rubber	-
Set Screw	Stainless Steel	SUS410
Grease Nipple	Stainless Steel	SUS304
Housing and Cover	Thermo Plastic	VALOX420

2.2 CHEMICAL COMPOSITION OF HIGH CARBON CHROMIUM BEARING STEEL BEARING INSERT MATERIALS

Table 2.2.1

SYMBOL	Component	CHEMICAL COMPOSITION %							Hardness HRC
		C	Si	Mn	P	S	Cr	Mo	
SUJ2	Ball, Inner Ring and Outer Ring	0.9~1.10	0.15~0.35	≤ 0.50	≤ 0.025	≤ 0.025	1.30~1.60	0.08	58~65
SPCC	Cage and Shield	≤ 0.12	–	≤ 0.50	≤ 0.040	≤ 0.045	–	–	–

2.3 CHEMICAL COMPOSITION OF STAINLESS STEEL BEARING INSERT MATERIALS

Table 2.3.1

JIS Symbol	Component	CHEMICAL COMPOSITION %							Hardness HRC
		C	Si	Mn	P	S	Cr	Mo	
SUS440C	Ball, Inner Ring and Outer Ring	0.9~1.20	≤ 1.00	≤ 1.00	≤ 0.040	≤ 0.030	16.0~18.0	0.75	58~65

Table 2.3.2

JIS Symbol	Component	CHEMICAL COMPOSITION %			Hardness HB
		C	Cr	Ni	
SUS410	Set Screw	0.16~0.17	11.5~13.5	0.70~0.80	380~400

Table 2.3.3

JIS Symbol	Component	CHEMICAL COMPOSITION %				Hardness HRC
		C	Cr	Ni	N	
SUS304	Cage	0.075~0.085	18.0~20.0	8.0~10.0	≤ 0.1	25~39

2.4 Operating temperature range for FBJ Pillow Block bearings.

FBJ Pillow Block Bearing Inserts with Cast Iron Housings, Pillow Block Bearing Inserts with Pressed Steel Housings and Stainless Steel Bearing Inserts can withstand the operating temperatures from –15°C to 120°C.

FBJ Pillow Block bearings with Thermo Plastic Housing and Stainless Steel Bearing Inserts can withstand the operating temperatures from –15°C to 60°C

Operating environments of higher than 120°C or lower than –15°C of operating temperatures, please contact FBJ sales or engineering department.

3. LUBRICATION, CLEARANCE AND SPEED LIMITS OF FBJ PILLOW BLOCKS

3.1 BEARING LUBRICATION

Bearing lubrication reduces friction and wear, acts as a coolant, minimizes contamination, prevents corrosion, and generally extends bearing life. Selecting the best lubricant for your specific application becomes a very important decision; however, choosing from the hundreds available lubricants can be an overwhelming task. FBJ engineering staff is available to help make the right decision for your application.

FBJ bearing Inserts with pressed steel housings are for life lubrication and filled with high quality multipurpose grease, with the correct quantity. These bearings cannot be re-lubricate.

Bearing Inserts with Cast iron housings or Thermo Plastic housings are equipped with a grease nipple and also filled with high quality multipurpose grease and with the correct quantity. These bearings are to be re-lubricate after the recommended hours of initial operation, to ensure a long life and smooth running.

It is important to use the correct grease with correct amount in the correct replenishment period. Following tables will help you to decide the both factors, the replenishment period and re-fill quantity.

Table 3.1.1

Bore Dia Ref	Replenishment Grease Quantity (g)		
	UC2, UK2	UCX, UKX	UC3, UK3
01	1.8	–	–
02	1.8	–	–
03	1.8	–	–
04	1.8	–	–
05	1.8	3.3	4.2
06	3.3	4.5	5.9
07	4.5	5.6	8.1
08	5.6	6.5	10.1
09	6.5	7.7	12.6
10	7.7	10.3	18.1

Bore Dia Ref	Replenishment Grease Quantity (g)		
	UC2, UK2	UCX, UKX	UC3, UK3
11	10.3	13.2	25
12	13.2	14.9	31
13	14.9	18.2	39
14	18.2	21.0	47
15	21.0	25.0	56
16	25.0	31.0	65
17	31.0	38.0	78
18	38.0	48.0	90
19	–	–	108
20	–	–	141

Table 3.1.2 Grease Replenishment Period

Ambient Condition	Bearing Operating Temperature ºC		Replenishment Period	
	Over	Below	d_n : Under 50000	d_n : Over 50000
Fairly Clean	–	50	No supply	18 ~ 30 Months
	50	70	12 ~ 18 Months	6 ~ 12 Months
	70	100	4 ~ 8 Months	1 ~ 3 Months
	100	–	2 ~ 4 Weeks	1 ~ 2 Weeks
Somewhat Dusty	–	50	1 ~ 2 Years	6 ~ 12 Months
	50	70	4 ~ 8 Months	2 ~ 4 Months
	70	100	3 ~ 6 Weeks	2 ~ 4 Weeks
	100	–	1 ~ 2 Weeks	Every Week
Considerable Dusty	–	70	1 ~ 2 Months	3 ~ 6 Weeks
	70	100	2 ~ 4 Weeks	1 ~ 2 Weeks
	100	–	1 ~ 7 Days	1 ~ 3 Days
Much Moisture and Water Splash	–	–	1 ~ 3 Days	Every Day

d_n = d (shaft diameter in mm) x n (speed in rpm)

3.2 CLEARANCE OF FBJ BEARING INSERTS

All FBJ cylindrical bore insert bearings are of normal clearance and tapered bore insert bearings are of C3 clearance. If you need any special clearance other than this, please consult FBJ Engineering department.

Table 3.2.1

Bore Dia Ref (d) (mm)		Clearance (μm)			
		Normal		C3	
Over	Incl	Min.	Max.	Min.	Max.
2.5	10	2	13	8	23
10	18	3	18	11	25
18	24	5	20	13	28
24	30	5	20	13	28
30	40	6	20	15	33
40	50	6	23	18	36
50	65	8	28	23	43
65	80	10	30	25	51
80	100	12	36	30	58
100	120	15	41	36	66

3.3 SPEED LIMITS FOR FBJ PILLOW BLOCK BEARING INSERTS

Table 3.3.1

BEARING NUMBER		MAX SPEED (rpm)	BEARING NUMBER		MAX SPEED (rpm)	BEARING NUMBER		MAX SPEED (rpm)	BEARING NUMBER		MAX SPEED (rpm)	BEARING NUMBER		MAX SPEED (rpm)
UC, UK	201	5800	–	–	–	–	–	–	–	–	–	SA, SB	201	6800
UC, UK	202	5800	–	–	–	–	–	–	–	–	–	SA, SB	202	6800
UC, UK	203	5800	–	–	–	–	–	–	–	–	–	SA, SB	203	6800
UC, UK	204	5800	–	–	–	–	–	–	SSUC	204	5000	SA, SB	204	5800
UC, UK	205	5100	UC, UK	X 05	4300	UC, UK	305	4600	SSUC	205	4000	SA, SB	205	5100
UC, UK	206	4300	UC, UK	X 06	3700	UC, UK	306	3900	SSUC	206	3300	SA, SB	206	4300
UC, UK	207	3700	UC, UK	X 07	3300	UC, UK	307	3400	SSUC	207	3200	SA, SB	207	3700
UC, UK	208	3300	UC, UK	X 08	3100	UC, UK	308	3100	SSUC	208	2800	SA, SB	208	3300
UC, UK	209	3100	UC, UK	X 09	2800	UC, UK	309	2700	SSUC	209	2600	SA, SB	209	3100
UC, UK	210	2800	UC, UK	X 10	2500	UC, UK	310	2400	SSUC	210	2300	SA, SB	210	2800
UC, UK	211	2500	UC, UK	X 11	2300	UC, UK	311	2300	SSUC	211	2000	SA, SB	211	2500
UC, UK	212	2300	UC, UK	X 12	2200	UC, UK	312	2100	SSUC	212	1800	SA, SB	212	2300
UC, UK	213	2200	UC, UK	X 13	2100	UC, UK	313	1900	–	–	–	–	–	–
UC, UK	214	2100	UC, UK	X 14	2000	UC, UK	314	1800	–	–	–	–	–	–
UC, UK	215	2000	UC, UK	X 15	1800	UC, UK	315	1700	–	–	–	–	–	–
UC, UK	216	1800	UC, UK	X 16	1700	UC, UK	316	1600	–	–	–	–	–	–
UC, UK	217	1700	UC, UK	X 17	1600	UC, UK	317	1500	–	–	–	–	–	–
UC, UK	218	1600	–	–	–	UC, UK	318	1400	–	–	–	–	–	–
–	–	–	–	–	–	UC, UK	319	1400	–	–	–	–	–	–
–	–	–	–	–	–	UC, UK	320	1300	–	–	–	–	–	–

4. BEARING LIFE OF FBJ PILLOW BLOCK UNITS

Any bearing, even operating under normal conditions, the surfaces of the raceway and rolling elements are constantly being subjected to repeated compressive stresses which cause flaking of these surfaces to occur. This flaking is due to material fatigue and will eventually cause the bearings to fail.

When bearing is stationary, still the rolling elements are subjected to static loads. This leads to a plastic total deformation of rolling element and raceway of about 0.0001 of the rolling element diameter at the most heavily loaded contact area.

The life of bearing is regarded as expired when the revolution fatigue is produced on the rolling face of bearing. In reference with this life, the Load rating is defined where the load is applied under certain conditions.

The life of each bearing is defined as the total number of revolution until the first flaking mark due to fatigue appears. When the number of rotation is constant, it is shown by the total time until the first flaking mark appears. Even if same type of bearings of excellent materials with same design and finished by the same heat treatment and manufacturing processes are driven under the same conditions, the lives of bearings scatter to some extent due to uncontrollable differences in them. Therefore, it is not adequate to use the mean life as the standard life of bearings.

The rated Life is defined here as the total number of rotations or time of driving after which 90% of the bearings of a group under test remains without fatigue.

The basic load rating is the pure radial load of constant direction and magnitude which gives the rated life of 10^6rotations when the outer ring is fixed and the inner ring is rotated. There exists the following relationship between the basic load rating and the life.

$$Ln = \left(\frac{C}{P}\right)^K$$

Where, **Ln :** rated life in total number of rotations which unit is $\mathbf{10^6}$ rotations.
(When **Ln = 3**, it means **3** million rotations.)

C : basic load rating [**kgf**]

K : coefficient(3 for ball bearing and $\frac{10}{3}$ for roller bearing)

P : load (equivalent radial load) [**kgf**]

When the bearings are installed to an apparatus rotating at a constant number of rotation, the lives are mostly estimated by driving hours, and the following equation which is modified by the above equation is used.

$$Lh = \frac{10^6}{60}\,\frac{Ln}{n} = \frac{10^6}{60n}\left(\frac{C}{P}\right)^K = \frac{50000}{3n}\left(\frac{C}{P}\right)^K$$

where **Lh :** rated life time in total rotating time, [**hour**]
n : speed of rotation, [**r.p.m.**]

The above equation can be modified to give an equation which is convenient to actual designing

$$Lh = 500fh^K$$

$$fh = fn \cdot \frac{C}{P}$$

$$fn = \left(\frac{33.3}{n}\right)^{\frac{1}{K}}$$

where, **fh :** life factor
fn : speed factor

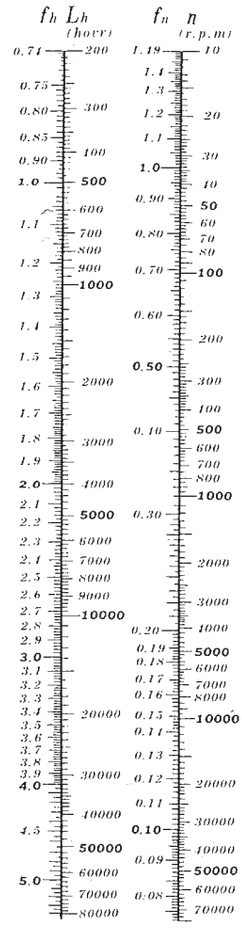

Please refer to the nomogram at the right hand, which shows the values of **n:fn** and **Lh:fh** for the ball bearing.

5. ALLOWABLE LOAD FOR FBJ HOUSINGS

It is important, not only the dynamic and static load capacity of a bearing insert, but also to consider destruction strength of the hosing, before you select the correct bearing for your application.

FBJ has done extensive research on this and present below tables to ease your problems. Please note that, allowable load varies depending on load direction and type of the housing.

5.1 ALLOWABLE LOAD FOR P TYPE CAST IRON HOUSINGS

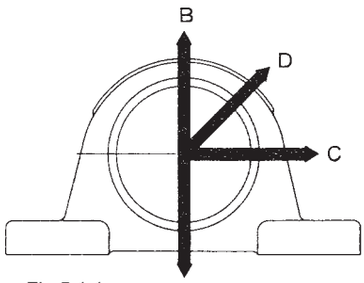

Fig 5.1.1

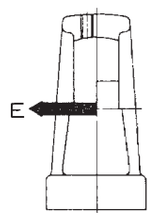

Fig 5.1.2

Table 5.1.1

Housing Number	Destruction Strength / (N) and Load Direction				
	A	B	C	D	E
P203	7100	3000	5000	2300	1100
P204	8100	3300	5600	2500	1700
P205	9400	3700	6100	2800	1800
P206	12000	5000	9000	3500	2200
P207	16000	6100	10000	4400	2400
P208	18000	6600	11000	4600	2500
P209	19000	7000	12000	4900	2600
P210	19000	7500	14000	5700	3200
P211	21000	8200	15000	6000	3400
P212	28000	11000	17000	7300	4400
P213	29000	12000	19000	8300	5100
P214	32000	12000	20000	8400	5600
P215	33000	13000	21000	9200	5800
P216	36000	15000	27000	11000	6600
P217	45000	17000	28000	12000	7500
P218	48000	19000	33000	13000	12000

Table 5.1.2

Housing Number	Destruction Strength / (N) and Load Direction				
	A	B	C	D	E
PX05	13000	5000	9000	3500	2300
PX06	17000	6200	10000	4500	3100
PX07	19000	6800	11000	4800	3400
PX08	20000	7500	13000	5300	3900
PX09	22000	8200	14000	5700	4200
PX10	25000	10000	16000	6900	5200
PX11	28000	11000	18000	7600	5600
PX12	30000	13000	20000	8800	6400
PX13	36000	13000	20000	9200	6700
PX14	37000	14000	23000	9800	7100
PX15	39000	18000	30000	13000	9200
PX16	43000	19000	31000	13000	9400
PX17	50000	21000	35000	15000	10000

Table 5.1.3

Housing Number	Destruction Strength / (N) and Load Direction				
	A	B	C	D	E
P305	15000	4500	7100	3400	2600
P306	18000	6100	8400	4200	3000
P307	20000	6300	11000	5400	3800
P308	22000	7500	12000	5700	4800
P309	27000	8500	15000	6800	6300
P310	34000	9800	16000	7100	7900
P311	36000	11000	23000	8000	8600
P312	32000	13000	24000	8900	9000
P313	37000	15000	25000	10000	9300
P314	40000	16000	27000	10000	9500
P315	43000	18000	30000	12000	11000
P316	47000	19000	35000	13000	12000
P317	49000	21000	36000	15000	13000
P318	55000	22000	38000	16000	13000
P319	60000	24000	42000	18000	14000
P320	68000	27000	56000	19000	17000

5.2 ALLOWABLE LOAD FOR FLANGE TYPE CAST IRON HOUSINGS

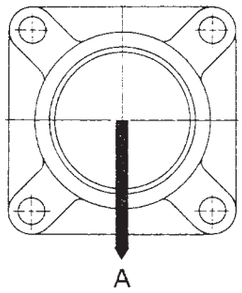

Fig 5.2.1

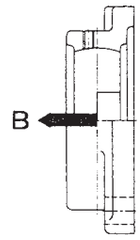

Fig 5.2.2

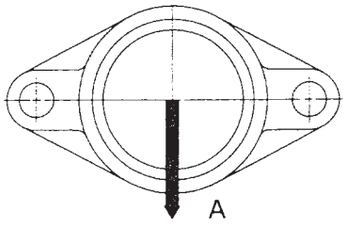

Fig 5.2.3

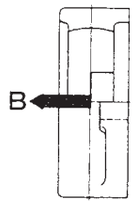

Fig 5.2.4

Table 5.2.1

Housing Number		Destruction Strength / (N) and Load Direction			
		F2		FL2	
		A	B	A	B
F204	FL204	4300	1800	2400	1200
F205	FL205	6700	2500	3800	1600
F206	FL206	6700	3000	3800	2000
F207	FL207	6500	3600	4100	2300
F208	FL208	7100	3900	4100	2700
F209	FL209	10000	4700	6200	3200
F210	FL210	10000	5000	6200	3900
F211	FL211	9200	5700	7400	4400
F212	FL212	9200	6200	8800	4800
F213	FL213	17000	6900	9800	6200
F214	FL214	19000	7600	10000	7000
F215	FL215	19000	8000	11000	7200
F216	FL216	17000	8600	13000	8600
F217	FL217	21000	9500	14000	9400
F218	FL218	25000	11000	14000	14000

Table 5.2.2

Housing Number		Destruction Strength / (N) and Load Direction			
		FX		FLX	
		A	B	A	B
FX05	FLX05	6700	3100	3100	2300
FX06	FLX06	5000	3800	2800	2900
FX07	FLX07	6600	4300	3000	3700
FX08	FLX08	7200	4800	3800	4100
FX09	FLX09	7200	5200	4100	5300
FX10	FLX10	10000	5800	5100	5700
FX11		10000	6600		
FX12		16000	7800		
FX13		16000	8000		
FX14		19000	8900		
FX15		21000	8500		
FX16		19000	10000		
FX17		19000	10000		

Table 5.2.3

Housing Number		Destruction Strength / (N) and Load Direction			
		F3		FL3	
		A	B	A	B
F305	FL305	7200	3500	3800	2100
F306	FL306	8300	4400	6800	2300
F307	FL307	10000	5100	6600	2800
F308	FL308	13000	6100	6400	3700
F309	FL309	11000	6600	9900	4000
F310	FL310	15000	7900	11000	5500
F311	FL311	17000	7800	11000	5900
F312	FL312	19000	9700	12000	6100
F313	FL313	17000	9000	12000	8300
F314	FL314	23000	9800	17000	8700
F315	FL315	27000	11000	15000	9500
F316	FL316	24000	12000	20000	11000
F317	FL317	27000	13000	20000	7500
F318	FL318	34000	14000	23000	14000
F319	FL319	32000	17000	27000	19000
F320	FL320	38000	18000	28000	20000

5.3 ALLOWABLE LOAD FOR TAKE UP UNIT CAST IRON HOUSINGS

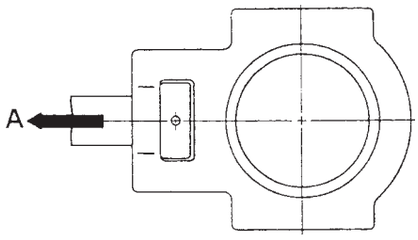

Fig 5.3.1

Table 5.3.1

Housing Number			Destruction Strength / (N) and Load Direction		
			T2	TX	T3
			A	A	A
T204			3400		
T205	TX05	T305	3800	4100	5300
T206	TX06	T306	4100	5700	6200
T207	TX07	T307	5800	7800	7100
T208	TX08	T308	8200	7800	8100
T209	TX09	T309	7800	8500	9300
T210	TX10	T310	8600	9400	11000
T211	TX11	T311	9700	11000	12000
T212	TX12	T312	10000	13000	13000
T213	TX13	T313	13000	13000	15000
T214	TX14	T314	13000	13000	17000
T215	TX15	T315	13000	13000	18000
T216	TX16	T316	14000	15000	20000
T217	TX17	T317	16000	16000	21000
		T318			25000
		T319			27000
		T320			32000

5.4 ALLOWABLE LOAD FOR PEDASTAL TYPE CAST IRON HOUSINGS

Fig 5.4.1

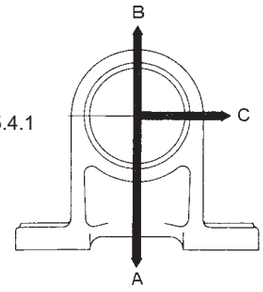

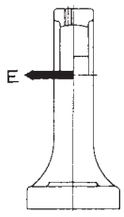

Fig 5.4.2

Table 5.4.1

Housing Number	Destruction Strength / (N) and Load Direction			
	A	B	C	E
PH204	8000	2700	1800	1700
PH205	9200	3000	2000	1800
PH206	11000	4100	2800	2200
PH207	15000	4900	3200	2400
PH208	17000	5300	3500	2500
PH209	18000	5700	3900	2600
PH210	19000	6100	4400	3200
PH211	20000	6500	5000	3600
PH212	21000	7000	5500	4000
PH213	22000	7700	6000	4600
PH214	24000	8300	6600	5200
PH215	26000	9000	7400	6000
PH216	28000	9800	8000	6600

5.5 ALLOWABLE LOAD FOR ALL PRESSED STEEL HOUSINGS

Load capacity of, every pressed steel type housing is to be as follows.

Load capacity of radial direction = Basic Dynamic Load / 6
Load capacity of thrust direction = Basic Dynamic Load / 18

5.6 ALLOWABLE LOAD FOR THERMO-PLASTIC HOUSINGS

Fig 5.6.1

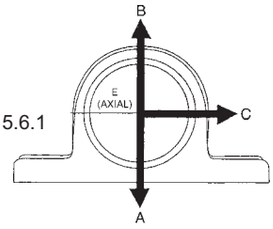

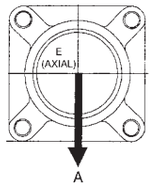

Fig 5.6.2

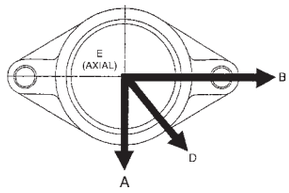

Fig 5.6.3

Table 5.6.1

Housing Number	DESTRUCTION STRENGTH / (N) and Load Direction									
	SPP				SPF		SPFL			
	A	B	C	E	A	E	A	B	D	E
204	16600	5600	7000	3000	14700	340	7400	5600	6600	3300
205	19600	5800	7400	3200	15700	340	7600	8000	8400	3300
206	28300	6000	8600	4000	17600	340	8500	10800	10300	3300
207	38300	6600	10300	5700	18100	350	10700	13800	12200	3400
208	44500	11100	12100	8500	18600	380	15100	17300	14000	3700
209	50000	11800	13800	9600	19600	420	18300	21000	16000	4100
210	54000	12400	15200	10900	21040	530	21000	24600	18500	4800
211	60000	13100	16300	11700	23500	670	25320	29200	21000	5300
212	68000	14000	17400	13400	27000	780	28400	33400	24000	6100

6. MOUNTING OF FBJ PILLOW BLOCK UNITS

6.1 Mounting on Shaft

Table 6.1

TIGHTENING TORQUE FOR SET SCREW

Bearing Number	Set Screw	Tightening Torque
SB201~SB203 SER201~SER203	M 5X0.8	30
SB204~SB207 SER204~SER206 UC201~UC206 (SSUC201~SSUC206) UCX05 UC305~UC306	M 6X1	40
SB208 SER207~SER209 UC207~UC209 (SSUC207~SSUC209) UCX06~UCX08 UC307	M 8X1	85
SER210~SER212 UC210~UC212 (SSUC210~SSUC212) UCX09~UCUCX11 UC308~UC309	M 10X1.25	175
UC213~UC218 UCX12~UCX17 UC310~UC314	N 12X1.5	280
UC315~UC316	M 14X1.5	350
UC317~UC319	M 16X1.5	560
UC320	M 18X1.5	620

Fig 6.1

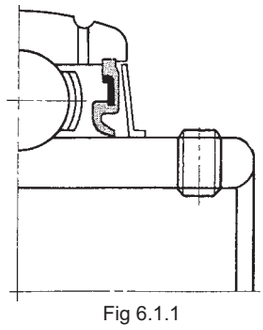

Fig 6.1.1

6.1.1 Set Screw Method

Two knurled cup-point, self locking, socket-head set screws (Fig 6.1) fitted at 120° apart in the extended inner ring of the bearing insert.

For standard loads and moderate speeds simply mount the bearing unit into position and tighten down the set screw to the recommended torque value. Additional security can be achieved by spot drilling the shaft to accommodate the set screw point. Using the correct size of socket head wrench tightens the set screw to recommended torque.

A lock washer is provided which prevents the locknut backing off when one of the tabs is engaged with the corresponding notch in the locknut.

6.1.2 Eccentric Lock Collar Method

Here, an eccentric diameter formed on the extended inner ring of the bearing which engages a similarly formed eccentric diameter in the bore of a separate collar.

Locking is achieved by turning the collar in the direction of shaft rotation until the eccentric diameters of both collar and inner ring are fully engaged. The collar is provided with a blind hole to facilitate tightening when locking the bearing to the shaft. The set screw when tightened to the recommended torque values prevents the collar backing off in service.

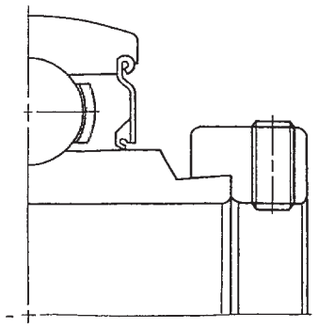

Fig 6.1.2

6.1.3 Adapter Sleeve Method

This consists of a standard adapter sleeve, locknut and lock washer.

When fitting the bearing to the shaft, care must be taken to ensure that the locknut is not over tightened as this can reduce or eliminate the required bearing internal clearance, resulting in premature failure.

The proper tightening condition can be obtained, firstly tightening the locknut by hand and then rotating 2/5 to 3/5 revolutions by a spanner.

A lock washer is provided which prevents the lock nut backing off when one of the tabs is engaged with the corresponding notch in the locknut.

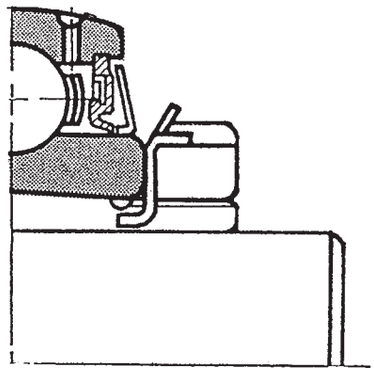

Fig 6.1.3

6.2 Shaft Selection

Standard mounting of cylindrical bore insert bearing to the shaft is loose fit. Still, selection of shaft has to consider the speed of the insert bearing. Below table provide you the dimensional accuracy of your shaft to be made for loose fit, in order to facilitate you smooth running.

Table 6.2.1

Shaft Dia (mm)		**Shaft Tolerance (m)**							
		j6		h6		h7		h8	
Over	incl	Max	Min	Max	Min	Max	Min	Max	Min
10	18	+ 8	- 3	0	-11	0	-18	0	-27
18	30	+ 9	- 4	0	-13	0	-21	0	-33
30	50	+11	- 5	0	-16	0	-25	0	-39
50	80	+12	- 7	0	-19	0	-30	0	-46
80	120	+13	- 9	0	-22	0	-35	0	-54
120	180	+14	-11	0	-25	0	-40	0	-63
Limit of dn value		above 120000		above 100000 up to 120000		above 60000 up to 100000		60000 and below	

dn value = d (shaft diameter in mm) x n (speed in rpm)

6.3 Mounting of Housing

To prevent any damage to the insert bearing due to faulty installation, Housing unit should always be bolted to a base which is to be flat and rigid. The bearing center alignment angle of +3° is required for the mounting base. In case of bearing unit with cover, this angle is restricted to +1°.

UCP 2 Series

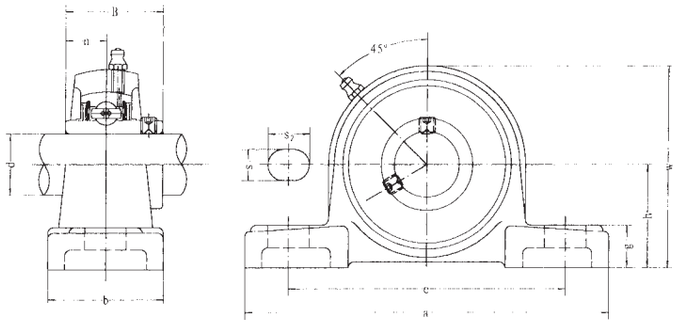

Pillow Blocks

Unit No.	Dimensions mm / inch											Bolt Size mm / inch	Bearing No.	Housing No.	Weight (kg)
	d	h	a	e	b	S_1	S_2	g	w	B	n				
*UCP 201	12	30.2	127	95	38	13	19	14	62	31	12.7	M10	UC 201	P203	0.69
*UCP 201-8	3/4	1-3/16	5	3-3/4	1-1/2	1/2	3/4	9/16	2-7/16	1.2205	0.500	3/8	UC 201-8		0.69
*UCP 202	15	30.2	127	95	38	13	19	14	62	31	12.7	M10	UC 202		0.69
*UCP 202-9	9/16	1-3/16	5	3-3/4	1-1/2	1/2	3/4	9/16	2-7/16	1.2205	0.500	3/8	UC 202-9	P203	0.69
*UCP 202-10	5/8												UC 202-10		0.69
*UPC 203	17	30.2	127	95	38	13	19	14	62	31	12.7	M10	UC 203	P203	0.68
*UCP 203-11	11/16	1-3/16	5	3-3/4	1-1/2	1/2	3/4	9/16	2-7/16	1.2205	0.500	3/8	UC 203-11		0.67
*UCP 204	20	33.3	127	95	38	13	19	14	65	31	12.7	M10	UC 204	P204	0.66
*UCP 204-12	3/4	1-5/16	5	3-3/4	1-1/2	1/2	3/4	9/16	2-9/16	1.2205	0.500	3/8	UC 204-12		0.66
*UCP 205	25	36.5	140	105	38	13	19	15	71	34.1	14.3	M10	UC 205		0.81
*UCP 205-13	13/16												UC 205-13		0.85
*UCP 205-14	7/8	1-7/16	5-1/2	4-1/8	1-1/2	1/2	3/4	19/32	2-25/32	1.3425	0.563	3/8	UC 205-14	P205	0.83
*UCP 205-15	15/16												UC 205-15		0.82
*UCP 205-16	1												UC 205-16		0.81
*UCP 206	30	42.9	165	121	48	17	20	17	84	38.1	15.9	M14	UC 206		1.24
*UCP 206-17	1-1/16												UC 206-17		1.27
*UCP 206-18	1-1/8	1-11/16	6-1/2	4-3/4	1-7/8	43/64	25/32	21/32	3-5/16	1.5000	0.626	1/2	UC 206-18	P206	1.26
*UCP 206-19	1-3/16												UC 206-19		1.24
*UCP 206-20	1-1/14												UC 206-20		1.23
*UCP 207	35	47.6	167	127	48	17	20	18	93	42.9	17.5	M14	UC 207		1.58
*UCP 207-20	1-1/4												UC 207-20		1.64
*UCP 207-21	1-5/16	1-7/8	6-9/16	5	1-7/8	43/64	25/32	45/64	3-21/32	1.6890	0.689	1/2	UC 207-21	P207	1.61
*UCP 207-22	1-3/8												UC 207-22		1.58
*UCP 207-23	1-7/16												UC 207-23		1.55
*UCP 208	40	49.2	184	137	54	17	20	18	100	49.2	19	M14	UC 208		1.89
*UCP 209-24	1-1/2	1-15/16	7-1/4	5-13/32	2-1/8	43/64	25/32	45/64	3-15/16	1.9370	0.748	1/2	UC 208-24	P208	1.93
*UCP 208-25	1-9/16												UC 208-25		1.90
*UCP 209	45	54.0	190	146	54	17	20	20	106	49.2	19	M14	UC 209		2.14
*UCP 209-26	1-5/8												UC 209-26	P209	2.24
*UCP 209-27	1-11/16	2-1/8	7-15/32	5-3/4	2-1/8	43/64	25/32	4-11/64	1.9370	0.748	1/2		UC 209-27		2.20
*UCP 209-28	1-3/4												UC 209-28		2.14
*UCP 210	50	57.2	206	159	60	20	23	21	113	51.6	19	M16	UC 210		2.66
*UCP 210-29	1-13/16												UC 210-29		2.78
*UCP 210-30	1-7/8	2-1/4	8-1/8	6-1/4	2-3/8	25/32	29/32	53/64	4-29/64	2.0315	0.748	5/8	UC 210-30	P210	2.73
*UCP 210-31	1-15/16												UC 210-31		2.68
*UCP 210-32	2												UC 210-32		2.64
*UCP 211	55	63.5	219	171	60	20	23	23	125	55.6	22.2	M16	UC 211		3.31
*UCP 211-32	2												UC 211-32		3.46
*UCP 211-33	2-1/16	2-1/2	8-5/8	6-47/64	2-3/8	25/32	29/32	29/32	4-59/64	2.1890	0.874	5/8	UC 211-33	P211	3.40
*UCP 211-34	2-1/8												UC 211-34		3.35
*UCP 211-35	2-3/16												UC 211-35		3.29
*UCP 212	60	69.8	241	184	70	20	23	25	138	65.1	25.4	M16	UC 212		4.90
*UCP 212-36	2-1/4												UC 212-36		5.03
*UCP 212-37	2-5/16	2-3/4	9-1/2	7-1/4	2-3/4	25/32	29/32	63/64	5-7/16	2.5630	1.000	5/8	UC 212-37	P212	4.95
*UCP 212-38	2-3/8												UC 212-38		4.88
*UCP 212-39	2-7/16												UC 212-39		1.81
UCP 213	65	76.2	265	203	70	25	28	27	150	65.1	25.4	M20	UC 213		5.15
UCP 213-40	2-1/2	3	10-7/16	8	2-3/4	63/64	1-3/32	1-1/16	5-29/32	2.5630	1.000	3/4	UC 213-40	P213	5.24
UCP 213-41	2-9/16												UC 213-41		5.15
UCP 214	70	79.4	266	210	72	25	28	27	156	74.6	30.2	M20	UC 214		6.20
UCP 214-42	2-5/8												UC 214-42	P214	6.41
UCP 214-43	2-1/16	3-1/8	10-15/32	8-17/64	2-27/32	63/64	1-3/32	1-1/16	6-9/64	2.9370	1.189	3/4	UC 214-43		6.31
UCP 214-44	2-3/4												UC 214-44		6.21
UCP 215	75	82.6	275	217	74	25	28	28	162	77.8	33.3	M20	UC 215		7.16
UCP 215-45	2-13/16												UC 215-45		7.41
UCP 215-46	2-7/8	3-1/4	10-53/64	8-35/64	2-29/32	63/64	1-3/32	1-3/32	6-3/8	3.0630	1.311	3/4	UC 215-46	P215	7.30
UCP 215-47	2-15/16												UC 215-47		7.19
UCP 215-48	3												UC 215-48		7.07
UCP 216	80	88.9	292	232	78	25	28	30	174	82.6	33.3	M20	UC 216		8.10
UCP 216-49	3-1/16												UC 216-49	P216	8.28
UCP 216-50	3-1/8	3-1/2	11-1/2	9-1/8	3-1/16	63/64	1-3/32	1-3/16	6-27/32	3.2520	1.311	3/4	UC 216-50		8.15
UCP 216-51	3-3/16												UC 216-51		8.02
UCP 217	85	95.2	310	247	83	25	28	32	185	85.7	34.1	M20	UC 217		9.81
UCP 217-52	3-1/4												UC 217-52	P217	10.03
UCP 217-53	3-5/16	3-3/4	12-13/64	9-23/32	3-17/64	63/64	1-3/32	1-1/4	7-9/32	3.3740	1.343	3/4	UC 217-53		9.89
UCP 217-55	3-7/16												UC 217-55		9.60
UCP 218	90	101.6	327	262	88	27	30	33	198	96	39.7	M22	UC 218	P218	11.96
UCP 218-56	3-1/2	4	12-7/8	10-5/16	3-15/32	1-1/16	1-3/16	1-19/64	7-51/64	3.7795	1.5630	7/8	UC 218-56		12.07

* **Add SS in front of the Unit No for Stainless Steel Bearing and Housing with plastic cover (Eg. SS UCP 205)**
* **Add SP in front of the Unit No for Stainless Steel Bearing with Thermo-Plastic Housing (Eg. SP UCP 205)**

Add C as suffix for both side Open cover (Eg. SP UCP 205 C)
or CD as suffix for one side Open & one side Closed cover (Eg. SP UCP 205 CD)

FBJ®

Pillow Blocks
(with Adapter mounted)

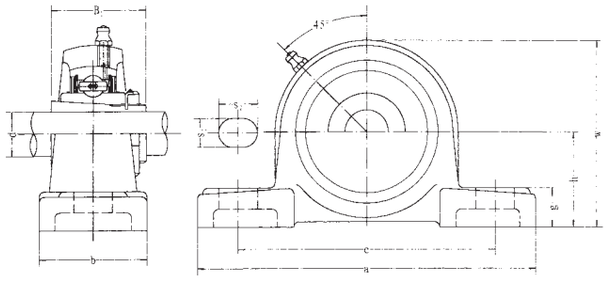

UKP 2 Series

Bearing Unit / Insert

Unit No.	Dimensions mm / inch										Bolt Size mm / inch	Bearing No.		Housing No.	Weight (kg)
	d	h	a	e	b	S_1	S_2	g	w	B					
UKP 205	20 3/4	36.5 1-7/16	140 5-1/2	105 4-1/8	38 1-1/2	13 1/2	19 3/4	15 19/32	71 2-25/32	35 1.378	M10 3/8	**UK 205**	**H305** **HE305**	**P 205**	0.86
UKP 206	25 7/8 1	42.9 1-11/16	165 6-1/2	121 4-3/4	48 1-7/8	17 43/64	20 25/32	17 43/64	84 3-5/16	38 1.496	M14 1/2	**UK 206**	**H306** **HS306** **HE306**	**P 206**	1.28
UKP 207	30 1-1/8	47.6 1-7/8	167 6-9/16	127 5	48 1-7/8	17 43/64	20 25/32	18 45/64	93 3-21/32	43 1.693	M14 1/2	**UK 207**	**H307** **HS307**	**P 207**	1.67
UKP 208	35 1-1/4 1-3/8	49.2 1-15/16	184 7-1/4	137 5-13/32	54 2-1/8	17 43/64	20 25/32	18 45/64	100 3-15/16	46 1.811	M14 1/2	**UK 208**	**H308** **HE308** **HS308**	**P 208**	1.99
UKP 209	40 1-7/16 1-1/2 1-5/8	54.0 2-1/8	190 7-15/32	146 5-3/4	54 2-1/8	17 43/64	20 25/32	20 25/32	106 4-11/64	50 1.969	M14 1/2	**UK 209**	**H309** **HA309** **HE309** **HS309**	**P 209**	1.29
UKP 210	45 1-5/8 1-11/16 1-3/4	57.2 2-1/4	206 8-1/8	159 6-1/4	60 2-3/8	20 25/32	23 29/32	21 53/64	113 4-29/64	55 2.165	M16 5/8	**UK 210**	**H310** **HS310** **HA310** **HE310**	**P 210**	2.83
UKP 211	50 1-7/8 1-15/16 2	63.5 2-1/2	219 8-5/8	171 6-47/64	60 2-3/8	20 25/32	23 29/32	23 29/32	125 4-59/64	59 2.323	M16 5/8	**UK 211**	**H311** **HS311** **H3A11** **HE311**	**P 211**	3.46
UKP 212	55 2-1/8	69.8 2-3/4	241 9-1/2	184 7-1/4	70 2-3/4	20 25/32	23 29/32	25 63/64	138 5-7/16	62 2.441	M16 5/8	**UK 212**	**H312** **HS312**	**P 212**	4.95
UKP 213	60 2-3/16 2-1/4 2-3/8	76.2 3	265 10-7/16	203 8	70 2-3/4	25 63/64	28 1-3/32	27 1-1/16	150 5-29/32	65 2.559	M20 3/4	**UK 213**	**H313** **HA313** **HE313** **HS313**	**P 213**	5.06
UKP 215	65 2-7/16 2-1/2	82.6 3-1/4	275 10-53/64	217 8-35/64	74 2-29/32	25 63/64	28 1-3/32	28 1-3/32	162 6-3/8	73 2.874	M20 3/4	**UK 215**	**H315** **HA315** **HE315**	**P 215**	7.27
UKP 216	70 2-11/16 2-3/4	88.9 3-1/2	292 11-1/2	232 9-1/8	78 3-1/16	25 63/64	28 1-3/32	30 1-3/16	174 6-27/32	78 3.071	M20 3/4	**UK 216**	**H316** **HA316** **HE316**	**P 216**	8.36
UKP 217	75 2-15/16 3	95.2 3-3/4	310 12-13/64	247 9-23/32	83 3-17/64	25 63/64	28 1-3/32	32 1-1/4	185 7-9/32	82 3.228	M20 3/4	**UK 217**	**H317** **HA317** **HE317**	**P 217**	10.23
UKP 218	80 3-3/16	101.6 4	327 12-7/8	262 10-5/16	88 3-15/32	27 1-1/16	30 1-3/16	33 1-19/64	198 7-51/64	86 3.386	M22 7/8	**UK 218**	**H318** **HA318**	**P 218**	12.34

NAR 2 Series

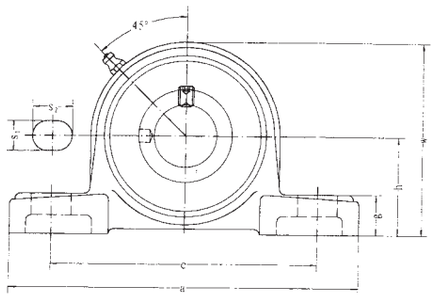

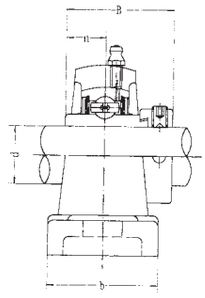

Pillow Blocks

Unit No.	Dimensions mm / inch											Bolt Size mm / inch	Bearing No.	Housing No.	Weight (kg)
	d	h	a	e	b	S_1	S_2	g	w	B	n				
NAP 204	20	33.3	127	95	38	13	19	14	65	43.7	17.1	M10	**NA 204**	**P204**	0.73
NAP 204-12	3/4	1-5/16	5	3-3/4	1-1/2	1/2	3/4	9/16	2-9/16	1.720	0.673	3/8	**NA 204-12**		0.73
NAP 205	25	36.5	140	105	38	13	19	15	71	44.4	17.5	M10	**NA 205**		0.88
NAP 205-13	13/16												**NA 205-13**		0.93
NAP 205-14	7/8	1-7/16	5-1/2	4-1/8	1-1/2	1/2	3/4	19/32	2-25/32	1.748	0.689	3/8	**NA 205-14**	**P205**	0.92
NAP 205-15	15/16												**NA 205-15**		0.90
NAP 205-16	1												**NA 205-16**		0.88
NAP 206	30	42.9	165	121	48	17	20	17	84	48.4	18.3	M14	**NA 206**		1.37
NAP 206-17	1-1/16												**NA 206-17**		1.42
NAP 206-18	1-1/8	1-11/16	6-1/2	4-3/4	1-7/8	43/64	25/32	21/32	3-5/16	1.906	0.720	1/2	**NA 206-18**	**P206**	1.39
NAP 206-19	1-3/16												**NA 206-19**		1.37
NAP 206-20	1-4/1												**NA 206-20**		1.34
NAP 207	35	47.6	167	127	48	17	20	18	93	51.1	18.8	M14	**NA 207**		1.70
NAP 207-20	1-4/1												**NA 207-20**		1.77
NAP 207-21	1-5/16	1-7/8	6-9/16	5	1-7/8	43/64	25/32	45/64	3-21/32	2.012	0.740	1/2	**NA 207-21**	**P207**	1.73
NAP 207-22	1-3/8												**NA 207-22**		1.70
NAP 207-23	1-7/16												**NA 208-23**		1.67
NAP 208	40	49.2	184	137	54	17	20	18	100	56.3	21.4	M14	**NA 208**		2.04
NAP 208-24	1-1/2	1-15/16	7-1/4	5-13/32	2-1/8	43/64	25/32	45/64	3-15/16	2.217	0.843	1/2	**NA 208-24**	**P208**	2.09
NAP 208-25	1-9/16												**NA 208-25**		2.05
NAP 209	45	54.0	190	146	54	17	20	20	106	56.3	21.4	M14	**NA 209**		2.31
NAP 209-26	1-5/8												**NA 209-26**	**P209**	2.42
NAP 209-27	1-11/16	2-1/8	7-15/32	5-3/4	2-1/8	43/64	25/32	25/32	4-11/64	2.217	0.843	1/2	**NA 209-27**		2.37
NAP 209-28	1-3/4												**NA 209-28**		2.33
NAP 210	50	57.2	206	159	60	20	23	21	113	62.7	24.6	M16	**NA 210**		2.85
NAP 210-29	1-13/16												**NA 210-29**		3.00
NAP 210-30	1-7/8	2-1/4	8-1/8	6-1/4	2-3/8	25/32	29/32	53/64	4-29/64	2.469	0.969	5/8	**NA 210-30**	**P210**	2.94
NAP 210-31	1-15/16												**NA 210-31**		2.88
NAP 210-32	2												**NA 210-32**		2.82
NAP 211	55	63.5	219	171	60	20	23	23	125	71.4	27.8	M16	**NA 211**		3.52
NAP 211-32	2												**NA 211-32**		3.72
NAP 211-33	2-1/16	2-1/2	8-5/8	6-47/64	2-3/8	25/32	29/32	29/32	4-59/64	2.811	1.094	5/8	**NA 211-33**	**P211**	3.64
NAP 211-34	2-1/8												**NA 211-34**		3.57
NAP 211-35	2-3/16												**NA 211-35**		3.49
NAP 212	60	69.8	241	184	70	20	23	25	138	77.8	31	M16	**NA 212**		5.24
NAP 212-36	2-1/4												**NA 212-36**		5.40
NAP 212-37	2-5/16	2-3/4	9-1/2	7-1/4	2-3/4	25/32	29/32	63/64	5-7/16	3.063	1.220	5/8	**NA 212-37**	**P212**	5.31
NAP 212-38	2-3/8												**NA 212-38**		5.26
NAP 212-39	2-7/16												**NA 212-39**		5.13
NAP 213	65	76.2	265	203	70	25	28	27	150	85.7	34.1	M20	**NA 213**		5.71
NAP 213-40	2-1/2	3	10-7/16	8	2-3/4	63/64	1-3/32	1-1/16	5-29/32	3.374	1.343	3/4	**NA 213-40**	**P213**	5.81
NAP 213-41	2-9/16												**NA 213-41**		5.70
NAP 214	70	79.4	266	210	72	25	28	27	156	85.7	34.1	M20	**NA 214**		6.70
NAP 214-42	2-3/8												**NA 214-42**	**P214**	6.94
NAP 214-43	2-11/16	3-1/8	10-15/32	8-17/64	2-27/32	63/64	1-3/32	1-1/16	6-9/64	3.374	1.343	3/4	**NA 214-43**		6.83
NAP 214-44	2-3/4												**NA 214-44**		6.71
NAP 215	75	82.6	275	217	74	25	28	28	162	92.1	37.3	M20	**NA 215**		7.79
NAP 215-45	2-13/16												**NA 215-45**		8.09
NAP 215-46	2-7/8	3-1/4	10-53/64	8-35/64	2-29/32	63/64	1-3/32	1-3/32	6-3/8	3.626	1.426	3/4	**NA 215-46**	**P215**	7.96
NAP 215-47	2-15/16												**NA 215-47**		7.83
NAP 215-48	3												**NA 215-48**		7.69

FBJ®

Pillow Blocks

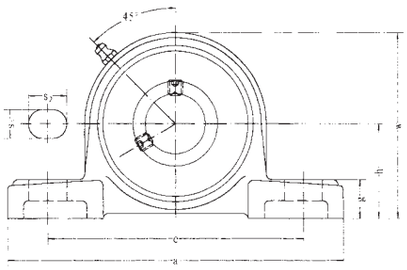

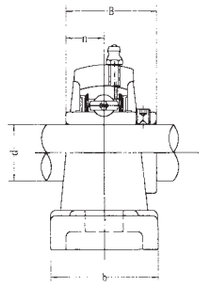

UCPX Series

Unit No.	Dimensions mm / inch											Bolt Size mm / inch	Bearing No.	Housing No.	Weight (kg)
	d	h	a	e	b	S_1	S_2	g	w	B	n				
UCP X05	25	44.4	159	119	51	17	20	18	85	38.1	15.9	M14	**UC X05**		
UCP X05-13	13/16												**UC X05-13**		
UCP X05-14	7/8	1-3/4	6-1/4	4-11/16	2	43/64	25/32	23/32	3-11/32	1.5000	0.626	1/2	**UC X05-14**	**PX05**	1.5
UCP X05-15	15/16												**UC X05-15**		
UCP X05-16	1												**UC X05-16**		
UCP X06	30	47.6	175	127	57	17	20	20	93	42.9	17.5	M14	**UC X06**		
UCP X06-17	1-1/16												**UC X06-17**		
UCP X06-18	1-1/8	1-7/8	6-7/8	5	2-1/4	43/64	25/32	25/32	3-21/32	1.6890	0.689	1/2	**UC X06-18**	**PX06**	2.0
UCP X06-19	1-3/16												**UC X06-19**		
UCP X06-20	1-1/4												**UC X06-20**		
UCP X07	35	54.0	203	144	57	17	20	21	105	49.2	19	M14	**UC X07**		
UCP X07-21	1-5/16												**UC X07-21**		
UCP X07-22	1-3/8	2-1/8	8	5-21/32	2-1/4	43/64	25/32	13/16	4-1/8	1.9370	0.748	1/2	**UC X07-22**	**PX07**	2.6
UCP X07-23	1-7/16												**UC X07-23**		
UCP X08	40	58.7	222	156	67	20	23	26	111	49.2	19	M16	**UC X08**		
UCP X08-24	1-1/2	2-5/16	8-3/4	6-5/32	2-5/8	25/32	29/32	1-1/32	4-3/8	1.9370	0.748	5/8	**UC X08-24**	**PX08**	3.3
UCP X08-25	1-9/16												**UC X08-25**		
UCP X09	45	58.7	222	156	67	20	23	26	116	51.6	19	M16	**UC X09**		
UCP X09-26	1-5/8												**UC X09-26**		
UCP X09-27	1-11/16	2-5/16	8-3/4	6-5/32	2-5/8	25/32	29/32	1-1/32	4-9/16	2.0315	0.748	5/8	**UC X09-27**	**PX09**	3.3
UCP X09-28	1-3/4												**UC X09-28**		
UCP X09-29	1-13/16												**UC X09-29**		
UCP X10	50	63.5	241	171	73	20	23	27	126	55.6	22.2	M16	**UC X10**		
UCP X10-30	1-7/8												**UC X10-30**		
UCP X10-31	1-15/16	2-1/2	9-1/2	6-47/64	2-7/8	25/32	29/32	1-1/16	4-31/32	2.1890	0.874	5/8	**UC X10-31**	**PX10**	4.3
UCP X10-32	2												**UC X10-32**		
UCP X11	55	69.8	260	184	79	25	28	30	137	65.1	25.4	M20	**UC X11**		
UCP X11-33	2-1/16												**UC X11-33**		
UCP X11-34	2-1/8												**UC X11-34**		
UCP X11-35	2-3/16	2-3/4	10-1/4	7-1/4	3-1/8	31/32	1-3/32	1-3/16	5-31/32	2.5630	1.000	3/4	**UC X11-35**	**PX11**	5.7
UCP X11-36	2-1/4												**UC X11-36**		
UCP X11-37	2-5/16												**UC X11-37**		
UCP X12	60	76.2	286	203	8.3	25	28	33	151	65.1	25.4	M20	**UC X12**		
UCP X12-38	2-3/8	3	11-1/4	8	3-9/32	31/32	1-3/32	1-5/16	5-15/16	2.5630	1.000	3/4	**UC X12-38**	**PX12**	7.3
UCP X12-39	2-7/16												**UC X12-39**		
UCP X13	65	76.2	286	203	83	25	28	33	154	74.6	30.2	M20	**UC X13**		
UCP X13-40	2-1/2	3	11-1/4	8	3-9/32	63/64	1-3/32	1-5/16	6-1/16	2.9370	1.189	3/4	**UC X13-40**	**PX13**	7.6
UCP X13-41	2-9/16												**UC X13-41**		
UCP X14	70	88.9	33.0	229	89	27	30	35	170	77.8	33.3	M22	**UC X14**		
UCP X14-42	2-5/8												**UC X14-42**		
UCP X14-43	2-11/16	3-1/2	13	9-1/32	3-1/2	1-1/16	1-3/16	1-3/8	6-11/16	3.0630	1.311	7/8	**UC X14-43**	**PX14**	9.9
UCP X14-44	2-3/4												**UC X14-44**		
UCP X15	75	88.9	330	229	89	27	30	35	175	82.6	33.3	M22	**UC X15**		
UCP X15-45	2-13/16												**UC X15-45**		
UCP X15-46	2-7/8	3-1/2	13	9-1/32	3-1/2	1-1/16	1-3/16	1-3/8	6-7/8	3.2520	1.311	7/8	**UC X15-46**	**PX15**	11
UCP X15-47	2-15/16												**UC X15-47**		
UCP X15-48	3												**UC X15-48**		
UCP X16	80	101.6	381	283	102	27	30	40	194	85.7	34.1	M22	**UC X16**		
UCP X16-49	3-1/16												**UC X16-49**		
UCP X16-50	3-1/8	4	15	11-5/32	4-1/32	1-1/16	1-3/16	1-9/16	7-5/8	3.3740	1.343	7/8	**UC X16-50**	**PX16**	15
UCP X16-51	3-3/16												**UC X16-51**		
UCP X16-52	3-1/4												**UC X16-52**		
UCP X17	85	101.6	381	283	102	27	30	40	200	96	39.7	M22	**UC X17**		
UCP X17-53	3-5/16	4	15	11-5/32	4-1/32	1-1/16	1-3/16	1-9/16	7-7/8	3.7795	1.563	7/8	**UC X17-53**	**PX17**	16
UCP X17-55	3-7/16												**UC X17-55**		

UCP 3 Series

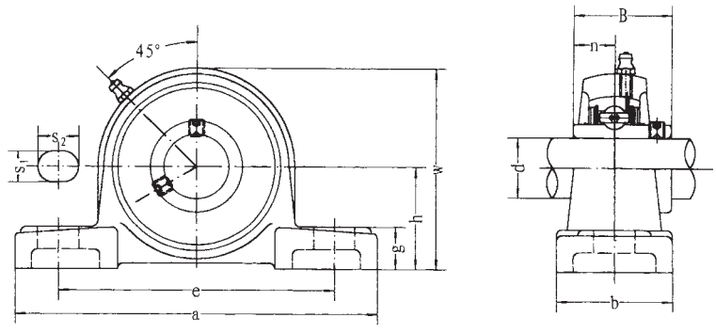

Pillow Blocks

Unit No.	Dimensions mm / inch											Bolt Size mm / inch	Bearing No.	Housing No.	Weight (kg)
	d	h	a	e	b	S_1	S_2	g	w	B	n				
UCP 305	25	45	175	132	45	17	20	15	85	38	38	M14	UC 305		
UCP 305-13	13/16	1-49/64	6-7/8	5-3/16	1-25/32	43/64	25/32	19/32	3-11/32	1.4961	0.591	1/2	UC 305-13		
UCP 305-14	7/8												UC 305-14	P305	1.4
UCP 305-15	15/16												UC 305-15		
UCP 305-16	1												UC 305-16		
UCP 306	30	50	180	140	50	17	20	18	95	43	17	M14	UC 306		
UCP 306-17	1-1/16												UC 306-17	P306	
UCP 306-18	1-1/8	1-31/32	7-3/32	5-1/2	1-31/32	43/64	25/32	23/32	3-3/4	1.6929	0.669	1/2	UC 306-18		1.8
UCP 306-19	1-3/16												UC 306-19		
UCP 307	35	56	210	160	56	17	25	20	106	48	19	M14	UC 307		
UCP 307-20	1-1/4												UC 307-20		
UCP 307-21	1-5/16												UC 307-21	P307	2.8
UCP 307-22	1-3/8	1-13/64	8-9/32	6-5/16	2-13/64	43/64	31/32	25/32	4-3/16	1.8898	1.748	1/2	UC 307-22		
UCP 307-23	1-7/16												UC 307-23		
UCP 308	40	60	220	170	60	17	27	22	116	52	19	M14	UC 308		
UCP 308-24	1-1/2	2-23/64	8-21/32	6-11/16	2-3/8	43/64	1-11/16	7/8	4-9/16	2.0472	0.748	1/2	UC 308-24	P308	3.0
UCP 308-25	1-9/16												UC 308-25		
UCP 309	45	67	245	190	67	20	30	24	129	57	22	M16	UC 309		
UCP 309-26	1-5/8												UC 309-26	P309	4.1
UCP 309-27	1-11/16	2-41/64	9-21/32	7-15/32	2-5/8	25/32	1-3/16	15/16	5-3/32	2.2441	0.866	5/8	UC 309-27		
UCP 309-28	1-3/4												UC 309-28		
UCP 310	50	75	275	212	75	20	35	27	143	61	22	M16	UC 310		
UCP 310-29	1-13/16												UC 310-29	P310	5.8
UCP 310-30	1-7/8	2-61/64	10-13/16	8-11/32	2-15/16	25/32	1-3/8	1-1/16	5-5/8	2.4016	0.866	5/8	UC 310-30		
UCP 310-31	1-15/16												UC 310-31		
UCP 311	55	80	310	236	80	20	38	30	154	66	25	M16	UC 311		
UCP 311-32	2												UC 311-32		
UCP 311-33	2-1/16												UC 311-33	P311	7.4
UCP 311-34	2-1/8	3-5/32	12-7/32	9-9/32	3-5/32	25/32	1-1/2	1-3/16	6-1/16	2.5984	0.984	5/8	UC 311-34		
UCP 311-35	2-3/16												UC 311-35		
UCP 312	60	85	330	250	85	25	38	32	165	71	26	M20	UC 312		
UCP 312-36	2-1/4												UC 312-36		
UCP 312-37	2-5/16												UC 312-37	P312	9.4
UCP 312-38	2-3/8	3-11/32	13	9-17/32	3-11/32	31/32	1-1/2	1-1/4	6-1/2	2.7953	1.024	3/4	UC 312-38		
UCP 312-39	2-7/16												UC 312-39		
UCP 313	65	90	340	260	90	25	38	33	176	75	30	M20	UC 313		
UCP 313-40	2-1/2	3-35/64	13-3/8	10-1/4	3-17/32	31/32	1-1/2	1-5/16	6-15/16	2.9528	1.181	3/4	UC 313-40	P313	10
UCP 313-41	2-9/16												UC 313-41		
UCP 314	70	95	360	280	90	27	40	35	187	78	33	M22	UC 314		
UCP 314-42	2-5/8												UC 314-42	P314	12
UCP 314-43	2-11/16	3-47/64	14-3/16	11-1/32	3-17/32	1-1/16	1-9/16	1-3/8	7-3/8	3.0708	1.299	7/8	UC 314-43		
UCP 314-44	2-3/4												UC 314-44		
UCP 315	75	100	380	290	100	27	40	35	198	82	32	M22	UC 315		
UCP 315-45	2-13/16												UC 315-45		
UCP 315-46	2-7/8												UC 315-46	P315	14
UCP 315-47	2-15/16	3-15/16	14-31/32	11-13/32	3-15/16	1-1/16	1-9/16	1-3/8	7-25/32	3.2283	1.250	7/8	UC 315-47		
UCP 315-48	3												UC 315-48		
UCP 316	80	106	400	300	110	27	40	40	210	86	34	M22	UC 316		
UCP 316-49	3-1/16												UC 316-49	P316	18
UCP 316-50	3-1/8	4-11/64	15-3/4	11-13/16	4-11/32	1-1/16	1-9/16	1-9/16	8-9/32	3.3858	1.339	7/8	UC 316-50		
UCP 316-51	3-3/16												UC 316-51		
UCP 317	85	112	420	320	110	33	45	40	220	96	40	M27	UC 317		
UCP 317-52	3-1/4												UC 317-52	P317	20
UCP 317-53	3-5/16	4-13/32	16-17/32	12-19/32	4-11/32	1-5/16	1-25/32	1-9/16	8-21/32	3.7795	1.575	1	UC 317-53		
UCP 317-55	3-7/16												UC 317-55		
UCP 318	90	118	430	330	110	33	45	45	235	96	40	M27	UC 318		
UCP 318-55	3-7/16	4-41/64	16-15/16	13	4-11/32	1-5/16	1-25/32	1-25/32	9-1/4	3.7795	1.575	1	UC 318-55	P318	24
UCP 318-56	3-1/2												UC 318-56		
UCP 319	95	125	470	360	120	36	50	45	250	103	41	M30	UC 319		
UCP 319-58	3-5/8												UC 319-58	P319	29
UCP 319-59	3-11/16	4-59/64	18-1/2	14-3/16	4-23/32	1-13/32	1-31/32	1-25/32	9-27/32	4.0551	1.614	1-1/8	UC 319-59		
UCP 319-60	3-3/4												UC 319-60		
UCP 320	100	140	490	380	120	36	50	46	273	108	42	M30	UC 320	P320	35.1
UCP 320-64	4	5-29/32	19-9/32	14-31/32	4-23/32	1-13/32	1-31/32	1-13/16	10-3/4	4-1/4	1-21/32	1-1/8	UC 320-64		

FBJ®

Pillow Blocks

UCPA 2 Series

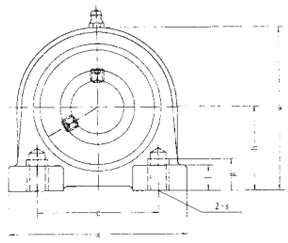

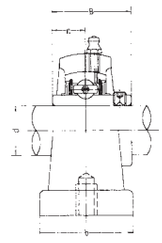

Unit No.	Dimensions mm inch											Bolt Size mm inch	Bearing No.	Housing No.	Weight (kg)
	d	h	a	e	b	S1	S2	g	w	B	n				
UCPA 201	12	30.2	76	52	40		15	11	62	31	12.7		**UC 201**		0.6
UCPA 201-8	3/4												**UC 201-8**		0.59
UCPA 202	15												**UC 202**		0.59
UCPA 202-9	9/16												**UC 202-9**		0.59
UCPA 202-10	5/8	1-3/16	3	2-3/64	1-9/16	M10	19/32	7/16	2-7/16	1.2205	0.500	M10	**UC 202-10**	**PA204**	0.59
UCPA 203	17												**UC 203**		0.58
UCPA 203-11	11/16												**UC 203-11**		0.57
UCPA 204	20												**UC 204**		0.56
UCPA 204-12	3/4												**UC 204-12**		0.56
UCPA 205	25	36.5	84	56	38		15	12	72	34.1	14.3		**UC 205**		0.83
UCPA 205-13	13/16												**UC 205-13**		0.87
UCPA 205-14	7/8	1-7/16	3-5/16	2-13/64	1-1/2	M10	19/32	15/32	2-53/64	1.3425	0.563	M10	**UC 205-14**	**PA205**	0.86
UCPA 205-15	15/16												**UC 205-15**		0.84
UCPA 205-16	1												**UC 206-16**		0.83
UCPA 206	30	42.9	94	66	50		18	12	84	38.1	15.9		**UC 206**		1.12
UCPA 206-17	1-1/16												**UC 206-17**		1.15
UCPA 206-18	1-1/8	1-11/16	3-45/64	2-19/32	1-31/32	M14	45/64	15/32	3-5/16	1.5000	0.626	M14	**UC 206-18**	**PA206**	1.14
UCPA 206-19	1-3/16												**UC 206-19**		1.12
UCPA 206-20	1-1/4												**UC 206-20**		1.11
UCPA 207	35	47.6	110	80	55		20	13	95	42.9	17.5		**UC 207**		1.48
UCPA 207-20	1-1/4												**UC 207-20**		1.54
UCPA 207-21	1-5/16	1-7/8	4-21/64	3-5/32	2-11/64	M14	25/32	33/64	3-47/64	1.6890	0.689	M14	**UC 207-21**	**PA207**	1.51
UCPA 207-22	1-3/8												**UC 207-22**		1.48
UCPA 207-23	1-7/16												**UC 207-23**		1.45
UCPA 208	40	49.2	116	84	58		20	13	100	49.2	19		**UC 208**		1.89
UCPA 208-24	1-1/2	1-15/16	4-9/16	3-5/16	2-9/32	M14	25/32	33/64	3-15/16	1.9370	0.748	M14	**UC 208-24**	**PA208**	1.93
UCPA 208-25	1-9/16												**UC 208-25**		1.90
UCPA 209	45	54.2	120	90	60		25	13	108	49.2	19		**UC 209**		1.98
UCPA 209-26	1-5/8												**UC 209-26**	**PA209**	2.08
UCPA 209-27	1-11/16	2-9/64	4-23/32	3-35/64	2-23/64	M14	63/64	33/64	4-1/4	1.9370	0.748	M14	**UC 209-27**		2.04
UCPA 209-28	1-3/4												**UC 209-28**		2.00
UCPA 210	50	57.2	130	94	64		25	14	116	51.6	19		**UC 210**		2.16
UCPA 210-29	1-13/16												**UC 210-29**		2.28
UCPA 210-30	1-7/8	2-1/4	5-1/8	3-45/64	2-33/64	M16	63/64	35/64	4-9/16	2.0315	0.748	M16	**UC 210-30**	**PA210**	2.23
UCPA 210-31	1-15/16												**UC 210-31**		2.18
UCPA 210-32	2												**UC 210-32**		2.14
UCPA 211	55	63.5	140	104	66		25	14	125	55.6	22.2		**UC 211**		3.26
UCPA 211-32	2												**UC 211-32**		3.41
UCPA 211-33	2-11/16	2-1/2	5-33/64	4-3/32	2-19/32	M16	63/64	35/64	4-59/64	2.1890	0.874	M16	**UC 211-33**	**PA211**	3.35
UCPA 211-34	2-1/8												**UC 211-34**		3.30
UCPA 211-35	2-3/16												**UC 211-35**		3.24
UCPA 212	60	69.9	150	114	68		25	15	138	65.1	25.4		**UC 212**		4.19
UCPA 212-36	2-1/4												**UC 212-36**		4.32
UCPA 212-37	2-5/16	2-3/4	5-29/32	4-31/64	2-43/64	M16	63/64	19/32	5-7/16	2.5630	1.000	M16	**UC 212-37**	**PA212**	4.24
UCPA 212-38	2-3/8												**UC 212-38**		4.17
UCPA 212-39	2-7/16												**UC 212-39**		4.10
UCPA 213	65	76.2	160	124	70		25	15	150	65.1	25.4		**UC 213**		6.23
UCPA 213-40	2-1/2	3	6-19/64	4-7/8	2-3/4	M16	63/64	19/32	5-29/32	2.5630	1.000	M16	**UC 213-40**	**PA213**	6.31
UCPA 213-41	2-9/16												**UC 213-41**		6.17

UCPH 2 Series

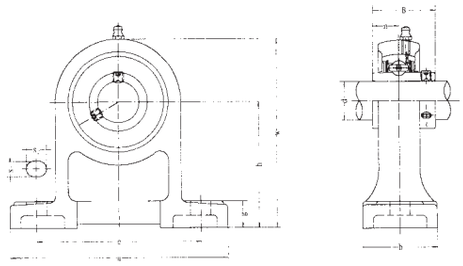

Pillow Blocks

Unit No.	Dimensions mm / inch											Bolt Size mm / inch	Bearing No.	Housing No.	Weight (kg)
	d	h	a	e	b	S_1	S_2	g	w	B	n				
UCPH 201	12	70	127	95	40	13	19	15	101	31	12.7	M10	**UC 201**		0.81
UCPH 201-8	3/4												**UC 201-8**		0.80
UCPH 202	15												**UC 202**		0.80
UCPH 202-9	9/16												**UC 202-9**		0.80
UCPH 202-10	5/8	2-3/4	5	3-3/4	1-9/16	1/2	3/4	19/32	3-63/64	1.2205	0.500	3/8	**UC 202-10**	**PH204**	0.80
UCPH 203	17												**UC 203**		0.79
UCPH 203-11	11-16												**UC 203-11**		0.78
UCPH 204	20												**UC 204**		0.77
UCPH 204-12	3/4												**UC 204-12**		0.77
UCPH 205	25	80	140	105	50	13	19	16	114	34.1	14.3	M10	**UC 205**		1.01
UCPH 205-13	13/16												**UC 205-13**		1.05
UCPH 205-14	7/8	3-5/32	5-1/2	4-1/8	1-31/32	1/2	3/4	5/8	4-31/64	1.3425	0.563	3/8	**UC 205-14**	**PH205**	1.04
UCPH 205-15	15/16												**UC 205-15**		1.02
UCPH 205-16	1												**UC 205-16**		1.01
UCPH 206	30	90	161	121	50	17	21	17	130	38.1	15.9	M14	**UC 206**		1.47
UCPH 206-17	1-1/16												**UC 206-17**		1.50
UCPH 206-18	1-1/8	3-35/64	6-11/32	4-3/4	1-31/32	43/64	53/64	43/64	5-1/8	1.5000	0.626	1/2	**UC 206-18**	**PH206**	1.49
UCPH 206-19	1-3/16												**UC 206-19**		1.47
UCPH 206-20	1-1/4												**UC 206-20**		1.46
UCPH 207	35	95	166	127	60	17	21	18	140	42.9	17.5	M14	**UC 207**		1.91
UCPH 207-20	1-1/4												**UC 207-20**		1.97
UCPH 207-21	1-5/16												**UC 207-21**	**PH207**	1.94
UCPH 207-22	1-3/8	3-47/64	6-17/32	5	2-23/64	43/64	53/64	45/64	5-33/64	1.6890	0.689	1/2	**UC 207-22**		1.91
UCPH 207-23	1-7/16												**UC 207-23**		1.88
UCPH 208	40	100	178	137	70	17	21	19	150	49.2	19	M14	**UC 208**		2.52
UCPH 208-24	1-1/2	3-15/16	7-1/64	5-13/23	2-3/4	43/64	53/64	3/4	5-29/32	1.9370	0.748	1/2	**UC 208-24**	**PH208**	2.56
UCPH 208-25	1-9/16												**UC 209-25**		2.53
UCPH 209	45	105	189	146	70	17	21	20	158	49.2	19	M14	**UC 209**		2.72
UCPH 209-26	1-5/8												**UC 209-26**	**PH209**	2.82
UCPH 209-27	1-11/16	4-9/64	7-7/16	5-3/4	2-3/4	43/64	53/64	25/32	6-7/32	1.9370	0.748	1/2	**UC 209-27**		2.78
UCPH 209-28	1-3/4												**UC 209-28**		2.74
UCPH 210	50	110	205	159	70	20	23	21	165	51.6	19	M16	**UC 210**		3.10
UCPH 210-29	1-13/16												**UC 210-29**		3.22
UCPH 210-30	1-7/8	4-21/64	8-5/64	6-1/4	2-3/4	25/32	29/32	53/64	6-1/2	2.0315	0.748	5/8	**UC 210-30**	**PH210**	3.17
UCPH 210-31	1-15/16												**UC 210-31**		3.12
UCPH 210-32	2												**UC 210-32**		3.08
UCPH 211	55	120	219	171	75	20	23	22	181	55.6	22.2	M16	**UC 211**		5.51
UCPH 211-32	2												**UC 211-32**		5.66
UCPH 211-33	2-1/16	4-23/32	8-5/8	6-47/64	2-61/64	25/32	29/32	55/64	7-1/8	2.1890	0.874	5/8	**UC 211-33**	**PH211**	5.60
UCPH 211-34	2-1/8												**UC 211-34**		5.55
UCPH 211-35	2-3/16												**UC 211-35**		5.49
UCPH 212	60	130	241	184	85	20	23	25	197	65.1	25.4	M16	**UC 212**		6.34
UCPH 212-36	2-1/4												**UC 212-36**		6.47
UCPH 212-37	2-5/16	5-1/8	9-1/2	7-1/4	3-11/32	25/32	29/32	63/64	7-3/4	2.5630	1.000	5/8	**UC 212-37**	**PH212**	6.40
UCPH 212-38	2-3/8												**UC 212-38**		6.32
UCPH 212-39	2-7/16												**UC 212-39**		6.25
UCPH 213	65	140	265	203	95	25	28	27	212	65.1	25.4	M20	**UC 213**		7.46
UCPH 213-40	2-1/2	5-33/64	10-7/16	8	3-3/4	63/64	1-3/32	1-1/16	8-11/32	2.5630	1.000	3/4	**UC 213-40**	**PH213**	7.54
UCPH 213-41	2-9/16												**UC 213-41**		7.40
UCPH 214	70	150	266	210	105	25	28	28	225	74.6	30.2	M20	**UC 214**		8.25
UCPH 214-42	2-5/8												**UC 214-42**	**PH214**	8.46
UCPH 214-43	2-11/16	5-29/32	10-15/32	8-17/64	5-9/64	63/64	1-3/32	1-7/64	8-55/64	2.9370	1.189	3/4	**UC 214-43**		8.36
UCPH 214-44	2-3/4												**UC 214-44**		8.26
UCPH 215	75	160	275	217	115	25	28	29	238	77.8	33.3	M20	**UC 215**		9.61
UCPH 215-45	2-13/16												**UC 215-45**		9.86
UCPH 215-46	2-7/8	5-19/64	10-53/64	8-35/64	4-17/32	63/64	1-3/32	1-9/64	9-3/8	3.0630	1.311	3/4	**UC 215-46**	**PH215**	9.75
UCPH 215-47	2-15/16												**UC 215-47**		9.64
UCPH 215-48	3												**UC 215-48**		9.52
UCPH 216	80	170	292	232	125	25	28	30	253	82.6	33.3	M20	**UC 216**		10.80
UCPH 216-49	3-1/16												**UC 216-49**	**PH216**	10.98
UCPH 216-50	3-1/8	6-11/16	11-1/2	9-1/8	4-59/64	63/64	1-3/32	1-3/16	9-61/64	3.2520	1.311	3/4	**UC 216-50**		10.58
UCPH 216-51	3-3/16												**UC 216-51**		10.72

FBJ®

Flange Units

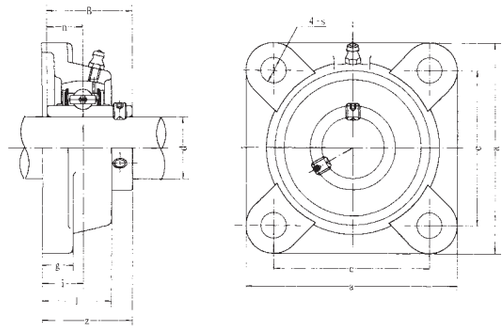

UCF 2 Series

Unit No.	Dimensions mm / inch d	a	e	i	g	l	S	z	B	n	Bolt Size mm / inch	Bearing No.	Housing No.	Weight (kg)
*UCF 201	12	86	64	15	12	25.5	12	33.3	31	12.7	M10	UC 201	F204	0.60
*UCF 201-8	3/4	3-3/8	2-33/64	19/32	15/32	1	15/32	1-5/16	1.2205	0.500	3/8	UC 201-8		0.59
*UCF 202	15	86	64	15	12	25.5	12	33.3	31	12.7	M10	UC 202		0.59
*UCF 202-9	9/16	3-3/8	2-33/64	19/32	15/32	1	15/32	1-5/16	1.2205	0.500	3/8	UC 202-9	F204	0.59
*UCF 202-10	5/8											UC 202-10		0.59
*UCF 203	17	86	64	15	12	25.5	12	33.3	31	12.7	M10	UC 203	F204	0.58
*UCF 203-11	11/16	3-3/8	2-33/64	19/32	15/32	1	15/32	1-5/16	1.2205	0.500	3/8	UC 203-11		0.57
*UCF 204	20	86	64	15	12	25.5	12	33.3	31	12.7	M10	UC 204	F204	0.56
*UCF 204-12	3/4	3-3/8	2-33/64	19/32	15/32	1	15/32	1-5/16	1.2205	0.500	3/8	UC 204-12		0.56
*UCF 205	25	95	70	16	14	27	12	35.8	34.1	14.3	M10	UC 205		0.80
*UCF 205-13	13/16											UC 205-13		0.84
*UCF 205-14	7/8	3-3/4	2-3/4	5/8	35/64	1-1/16	15/32	1-13/32	1.3425	0.563	3/8	UC 205-14	F205	0.83
*UCF 205-15	15/16											UC 205-15		0.81
*UCF 205-16	1											UC 205-16		0.80
*UCF 206	30	108	83	18	14	31	12	40.2	38.1	15.9	M10	UC 206		1.12
*UCF 206-17	1-1/16											UC 206-17		1.15
*UCF 206-18	1-1/8											UC 206-18	F206	1.14
*UCF 206-19	1-3/16	4-1/4	3-17/64	45/64	35/64	1-7/32	15/32	1-19/32	1.5000	0.626	3/8	UC 206-19		1.12
*UCF 206-20	1-1/4											UC 206-20		1.11
*UCF 207	35	117	92	19	16	34	14	44.4	42.9	17.5	M12	UC 207		1.46
*UCF 207-20	1-1/4											UC 207-20		1.52
*UCF 207-21	1-5/16											UC 207-21	F207	1.49
*UCF 207-22	1-3/8	4-39/64	3-5/8	3/4	5/8	1-11/32	35/64	1-3/4	1.6890	0.689	7/16	UC 207-22		1.46
*UCF 207-23	1-7/16											UC 207-23		1.43
*UCF 208	40	130	102	21	16	36	16	51.2	49.2	19	M14	UC 208		1.84
*UCF 208-24	1-1/12	5-1/8	4-1/64	53/64	5/8	1-27/64	5/8	2-1/64	1.9370	0.748	1/2	UC 208-24	F208	1.88
*UCF 208-25	1-9/16											UC 208-25		1.85
*UCF 209	45	137	105	22	18	38	16	52.2	49.2	19	M14	UC 209		2.15
*UCF 209-26	1-5/8											UC 209-26	F209	2.25
*UCF 209-27	1-11/16	5-13/32	4-9/64	55/64	23/32	1-1/2	5/8	2-1/16	1.9370	0.748	1/2	UC 209-27		2.21
*UCF 209-28	1-3/4											UC 209-28		2.17
*UCF 210	50	14.3	111	22	18	40	16	54.6	51.6	19	M14	UC 210		2.42
*UCF 210-29	1-13/16											UC 210-29		2.54
*UCF 210-30	1-7/8											UC 210-30	F210	2.49
*UCF 210-31	1-15/16	5-5/8	4-3/8	55/64	23/32	1-9/16	5/8	2-5/32	2.0315	0.748	1/2	UC 210-31		2.44
*UCF 210-32	2											UC 210-32		2.40
*UCF 211	55	162	130	25	20	43	19	58.4	55.6	22.2	M16	UC 211		3.31
*UCF 211-32	2											UC 211-32		3.46
*UCF 211-33	2-1/16											UC 211-33	F211	3.40
*UCF 211-34	2-1/8	6-3/8	5-1/8	63/64	25/32	1-11/16	3/4	1-5/16	2.1890	0.874	5/8	UC 211-34		3.35
*UCF 211-35	2-3/16											UC 211-35		3.29
UCF 212	60	175	143	29	20	48	19	68.7	65.1	25.4	M16	UC 212		4.28
UCF 212-36	2-1/4											UC 212-36		4.41
UCF 212-37	2-5/16	6-57/64	5-5/8	1-9/64	25/32	1-57/64	3/4	2-45/64	2.5630	1.000	5/8	UC 212-37	F212	4.33
UCF 212-38	2-3/8											UC 212-38		4.26
UCF 212-39	2-7/16											UC 212-39		4.19
UCF 213	65	187	149	30	22	50	19	69.7	65.1	25.4	M16	UC 213		4.99
UCF 213-40	2-1/2	7-23/64	5-55/64	1-3/16	55/64	1-31/32	3/4	2-3/4	2.5630	1.000	5/8	UC 213-40	F213	5.08
UCF 213-41	2-9/16											UC 213-41		4.99
UCF 214	70	193	152	31	22	54	19	75.4	74.6	30.2	M16	UC 214		5.85
UCF 214-42	2-5/8											UC 214-42	F214	6.06
UCF 214-43	2-11/16	7-19/32	5-63/64	1-7/32	55/64	2-1/8	3/4	2-31/32	2.9370	1.189	5/8	UC 214-43		5.96
UCF 214-44	2-3/4											UC 214-44		5.86
UCF 215	75	200	159	34	22	56	19	78.5	77.8	33.3	M16	UC 215		6.91
UCF 215-45	2-13/16											UC 215-45		7.16
UCF 215-46	2-7/8	7-7/8	6-17/64	1-11/32	55/64	2-7/32	3/4	3-3/32	3.0630	1.311	5/8	UC 215-46	F215	7.05
UCF 215-47	2-15/16											UC 215-47		6.94
UCF 215-48	3											UC 215-48		6.82
UCF 216	80	208	165	34	22	58	23	83.3	82.6	33.3	M20	UC 216		7.50
UCF 216-49	3-1/8											UC 216-49	F216	7.68
UCF 216-50	3-1/8	8-3/16	6-1/2	1-11/32	55/64	2-9/32	29/32	3-9/32	3.2520	1.311	3/4	UC 216-50		7.55
UCF 216-51	3-3/16											UC 216-51		7.42
UCF 217	85	220	175	36	24	63	23	87.6	85.7	34.1	M20	UC 217		9.66
UCF 217-52	3-1/4											UC 217-52	F217	9.88
UCF 217-53	3-5/16	8-21/23	6-57/64	1-27/64	15/16	2-15/32	29/32	3-7/16	3.3740	1.343	3/4	UC 217-53		9.74
UCF 217-55	3-7/16											UC 217-55		9.45
UCF 218	90	235	187	40	24	68	23	96.3	96	39.7	M20	UC 218	F218	12.06
UCF 218-56	3-1/2	9-1/4	7-23/64	1-37/64	15/16	2-11/16	29/32	3-25/32	3.7795	1.5630	3/4	UC 218-56		12.17

* **Add SS in front of the Unit No for Stainless Steel Bearing and Housing with plastic cover (Eg. SS UCP 205)**
* **Add SP in front of the Unit No for Stainless Steel Bearing with Thermo-Plastic Housing (Eg. SP UCF 205)**

Add C as suffix for both side Open cover (Eg. SP UCF 205 C)
or CD as suffix for one side Open & one side Closed cover (Eg. SP UCF 205 CD)

UKF 2 Series

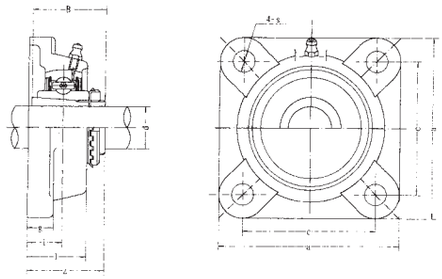

Flange Units
(Adapter mounted)

Unit No.	Dimensions mm / inch									Bolt Size mm / inch	Bearing No.	No.	Housing No.	Weight (kg)
	d	a	e	i	g	l	s	z	B_1					
UKF 205	20 3/4	95 3-3/4	70 2-3/4	16 5/8	14 35/64	27 1-1/6	12 15/32	35.5 1-25/64	35 1.378	M10 3/8	**UK 205**	**H305** **HE305**	**F205**	0.85
UKF 206	25 7/8 1	108 4-1/4	83 3-17/64	18 45/64	14 35/64	31 1-7/32	12 15/32	39 1-17/32	38 1.496	M10 3/8	**UK 206**	**H306** **HS306** **HE306**	**F206**	1.16
UKF 207	30 1-1/8	117 4-39/64	92 3-5/8	19 3/4	16 5/8	34 1-11/32	14 35/64	42.5 1-43/65	43 1.693	M12 7/16	**UK 207**	**H307** **HS307**	**F207**	1.55
UKF 208	35 1-1/4 1-3/8	130 5-1/8	102 4-1/64	21 53/64	16 5/8	36 1-27/64	16 5/8	46.5 1-53/64	46 1.811	M14 1/2	**UK 208**	**H308** **HE308** **HS308**	**F208**	1.94
UKF 209	40 1-7/16 1-1/2 1-5/8	137 5-13/32	105 4-9/64	22 55/64	18 23/32	38 1-1/2	16 5/8	48.5 1-29/32	50 1.969	M14 1/2	**UK 209**	**H309** **HA309** **HE309** **HS309**	**F209**	2.30
UKF 210	45 1-5/8 1-11/16 1-3/4	143 5-5/8	111 4-3/8	22 55/64	18 23/32	40 1-9/16	16 5/8	50 1-31/32	55 2.165	M14 1/2	**UK 210**	**H310** **HA310** **HE310** **HS310**	**F210**	2.59
UKF 211	50 1-7/8 1-15/16 2	162 6-3/8	130 5-1/8	25 63/64	20 25/32	43 1-11/16	19 3/4	54.5 2-9/64	59 2.323	M16 5/8	**UK 211**	**H311** **HA311** **HE311** **HS311**	**F211**	3.46
UKF 212	55 2-1/8	175 6-57/64	143 5-5/8	29 1-9/64	20 25/32	48 1-57/64	19 3/4	61 2-13/32	62 2.441	M16 5/8	**UK 212**	**H312** **HS312**	**F212**	4.33
UKF 213	60 2-3/16 2-1/4 2-3/8	187 7-23/64	149 5-55/64	30 1-3/16	22 55/64	50 1-31/32	19 3/4	64 2-33/64	65 2.559	M16 5/8	**UK 213**	**H313** **HA313** **HE313** **HS313**	**F213**	4.90
UKF 215	65 2-7/16 2-1/2	200 7-7/8	159 6-17/64	32 1-11/32	22 55/64	56 2-7/32	19 3/4	71 2-51/64	73 2.874	M16 5/8	**UK215**	**H315** **HA315** **HE315**	**F215**	7.02
UKF 216	70 2-11/16 2-3/4	208 8-3/16	165 6-1/2	34 1-11/32	22 55/64	58 2-9/32	23 29/32	73.5 2-57/64	78 3.071	M20 3/4	**UK216**	**H316** **HA316** **HE316**	**F216**	7.76
UKF 217	75 2-15/16 3	220 8-21/32	175 6-57/64	36 1-27/64	24 15/16	63 2-15/32	23 29/32	77 3-1/32	82 3.228	M20 3/4	**UK217**	**H317** **HA317** **HE317**	**F217**	10.08
UKF 218	80 3-3/16	235 9-1/4	187 7-23/64	40 1-37/64	24 15/16	68 2-11/16	23 29/32	81.5 3-13/64	86 3.386	M20 3/4	**UK218**	**H318** **H3A18**	**F218**	12.44

FBJ®

Flange Units
(with Eccentric Locking Collar)

NAF 2 Series

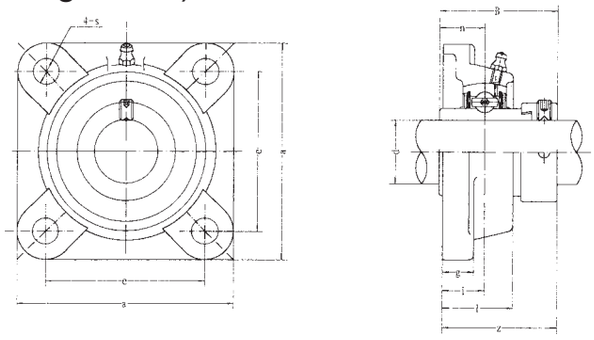

Unit No.	Dimensions mm / inch										Bolt Size mm / inch	Bearing No.	Housing No.	Weight (kg)
	d	a	e	i	g	l	S	z	B	n				
NAF 204	20	86	64	15	12	25.5	12	41.6	43.7	17.1	M10	**NA 204**	**F204**	0.63
NAF 204-12	3/4	3-3/8	2-33/64	19/32	15/32	1	15/32	1-41/64	1.720	0.673	3/8	**NA 204-12**		0.63
NAF 205	25	95	70	16	14	27	12	42.9	44.4	17.5	M10	**NA 205**		0.87
NAF 205-13	13/16											**NA 205-13**		0.92
NAF 205-14	7/8	3-3/4	2-3/4	5/8	35/64	1-1/16	15/32	1-11/16	1.748	0.689	3/8	**NA 205-14**	**F205**	0.91
NAF 205-15	15/16											**NA 205-15**		0.89
NAF 205-16	1											**NA 205-16**		0.87
NAF 206	30	108	83	18	14	31	12	48.1	48.4	18.3	M10	**NA 206**		1.25
NAF 206-17	1-1/16											**NA 206-17**		1.30
NAF 206-18	1-1/8	4-1/4	3-17/64	45/64	35/64	1-7/32	15/32	1-57/64	1.906	0.720	3/8	**NA 206-18**	**F206**	1.27
NAF 206-19	1-3/16											**NA 206-19**		1.25
NAF 206-20	1-1/4											**NA 206-20**		1.24
NAF 207	35	117	92	19	16	34	14	51.3	51.1	18.8	M12	**NA 207**		1.58
NAF 207-20	1-1/4											**NA 207-20**		1.65
NAF 207-21	1-5/16	4-39/64	3-5/8	3/4	5/8	1-11/32	35/64	2-1/64	2.012	0.740	7/16	**NA 207-21**	**F207**	1.61
NAF 207-22	1-3/8											**NA 207-22**		1.58
NAF 207-23	1-7/16											**NA 208-23**		1.55
NAF 208	40	130	102	21	16	36	16	55.9	56.3	21.4	M14	**NA 208**		1.99
NAF 208-24	1-1/2	5-1/8	4-1/64	53/64	5/8	1-27/32	5/8	2-13/64	2.217	0.843	1/2	**NA 208-24**	**F208**	2.04
NAF 208-25	1-9/16											**NA 208-25**		2.00
NAF 209	45	137	105	22	18	38	16	56.9	56.3	21.4	M14	**NA 209**		2.32
NAF 209-26	1-5/8											**NA 209-26**	**F209**	2.43
NAF 209-27	1-11/16	5-13/32	4-9/64	55/64	55/64	1-1/2	5/8	2-15/64	2.217	0.843	1/2	**NA 209-27**		2.38
NAF 209-28	1-3/4											**NA 209-28**		2.34
NAF 210	50	143	111	22	18	40	16	60.1	62.7	24.6	M14	**NA 210**		2.61
NAF 210-29	1-13/16											**NA 210-29**		2.76
NAF 210-30	1-7/8	5-5/8	4-3/8	55/64	23/32	1-9/16	5/8	2-3/8	2.469	0.969	1/2	**NA 210-30**	**F210**	2.70
NAF 210-31	1-15/16											**NA 210-31**		2.64
NAF 210-32	2											**NA 210-32**		2.58
NAF 211	55	162	130	25	20	43	19	68.6	71.4	27.8	M16	**NA 211**		3.52
NAF 211-32	2											**NA 211-32**		3.72
NAF 211-33	2-1/16	6-3/8	5-1/8	63/64	25/32	1-11/16	3/4	2-45/64	2.811	1.094	5/8	**NA 211-33**	**F211**	3.64
NAF 211-34	2-1/8											**NA 211-34**		3.57
NAF 211-35	2-3/16											**NA 211-35**		3.49
NAF 212	60	175	143	29	20	48	19	75.8	778	31	M16	**NA 212**		4.62
NAF 212-36	2-1/4											**NA 212-36**		4.78
NAF 212-37	2-5/16	6-57/64	5-5/8	1-9/64	25/32	1-57/64	3/4	2-63/64	3.063	1.200	5/8	**NA 212-37**	**F212**	4.69
NAF 212-38	2-3/8											**NA 212-38**		4.64
NAF 212-39	2-7/16											**NA 212-39**		4.51
NAF 213	65	187	149	30	22	50	19	81.6	85.7	34.1	M16	**NA 213**		5.55
NAF 213-40	2-1/2	7-23/64	5-55/64	1-3/16	55/64	1-31/32	3/4	3-7/32	3.374	1.343	5/8	**NA 213-40**	**F213**	5.65
NAF 213-41	2-9/16											**NA 213-41**		5.54
NAF 214	70	193	152	31	22	54	19	82.6	86.7	34.1	M16	**NA 214**		6.35
NAF 214-42	2-3/8											**NA 214-42**	**F214**	6.59
NAF 214-43	2-11/16	7-19/32	5-63/64	1-7/32	55/64	2-1/8	3/4	3-1/4	3.374	1.343	5/8	**NA 214.43**		6.48
NAF 214-44	2-3/4											**NA 214-44**		6.36
NAF 215	75	200	159	34	22	56	19	88.8	92.1	37.3	M16	**NA 215**		7.54
NAF 215-45	2-13/16											**NA 215-45**		7.84
NAF 215-46	2-7/8	7-7/8	6-17/64	1-11/32	55/64	2-7/32	3/4	3-1/2	3.626	1.426	5/8	**NA 215-46**	**F215**	7.71
NAF 215-47	2-15/16											**NA 215-47**		7.58
NAF 215-48	3											**NA 215-48**		7.44

UCFX Series

Flange Units

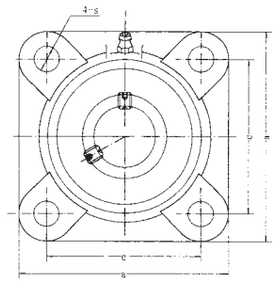

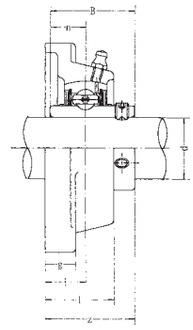

Unit No.	Dimensions mm / inch										Bolt Size mm / inch	Bearing No.	Housing No.	Weight (kg)
	d	a	e	i	g	l	s	z	B	n				
UCF X05	25	108	83	18	13	30	12	40.2	38.1	15.9	M10	**UC X05**		
UCF X05-13	13/16											**UC X05-13**		
UCF X05-14	7/8											**UC X05-14**	**FX05**	1.0
UCF X05-15	15/16	4-1/4	3-17/64	45/64	1/2	1-3/16	15/32	1-19/32	1.5000	0.626	3/8	**UC X05-15**		
UCF X05-16	1											**UC X05-16**		
UCF X06	30	117	92	19	14	34	16	44.4	42.9	17.5	M14	**UC X06**		
UCF X06-17	1-1/16											**UC X06-17**		
UCF X06-18	1-1/8											**UC X06-18**	**FX06**	
UCF X06-19	1-3/16	4-39/64	3-5/8	3/4	9/16	1-11/32	5/8	1-3/4	1.6890	0.689	1/2	**UC X06-19**		1.7
UCF X06-20	1-1/4											**UC X06-20**		
UCF X07	35	130	102	21	14	38	16	51.2	49.2	19	M14	**UC X07**		
UCF X07-21	1-5/16											**UC X07-21**	**FX07**	2.1
UCF X07-22	1-3/8	5-1/8	4-1/64	53/64	9/16	1-1/2	5/8	2-1/64	1.9370	0.748	1/2	**UC X07-22**		
UCF X07-23	1-7/16											**UC X07-23**		
UCF X08	40	137	105	22	14	40	19	52.2	49.2	19	M16	**UC X08**		
UCF X08-24	1-1/2	5-13/32	4-9/64	55/64	9/16	1-9/16	3/4	2-1/64	1.9370	0.748	5/8	**UC X08-24**	**FX08**	2.4
UCF X08-25	1-9/16											**UC X08-25**		
UCF X09	45	143	111	23	14	40	19	55.6	51.6	19	M16	**UC X09**		
UCF X09-26	1-5/8											**UC X09-26**		
UCF X09-27	1-11/16	5-5/8	4-3/8	29/32	9/16	1-9/16	3/4	2-3/16	2.0315	0.748	5/8	**UC X09-27**	**FX09**	2.5
UCF X09-28	1-3/4											**UC X09-28**		
UCF X09-29	1-13/16											**UC X09-29**		
UCF X10	50	162	130	26	20	44	19	59.4	55.6	22.2	M16	**UC X10**		
UCF X10-30	1-7/8											**UC X10-30**	**FX10**	3.9
UCF X10-31	1-15/16	6-3/8	5-1/8	1-1/32	25/32	1-23/32	3/4	2-11/32	2.1890	0.874	5/8	**UC X10-31**		
UCF X10-32	2											**UC X10-32**		
UCF X11	55	175	143	29	20	49	19	68.7	65.1	25.4	M16	**UC X11**		
UCF X11-33	2-1/16											**UC X11-33**		
UCF X11-34	2-1/8											**UC X11-34**	**FX11**	
UCF X11-35	2-3/16	6-57/64	5-5/8	1-9/64	25/32	1-15/16	3/4	2-45/64	2.5630	1.000	5/8	**UC X11-35**		4.9
UCF X11-36	2-1/4											**UC X11-36**		
UCF X11-37	2-5/16											**UC X11-37**		
UCF X12	60	187	149	34	21	59	19	73.7	65.1	25.4	M16	**UC X12**		
UCF X12-38	2-3/8	7-23/64	5-55/64	1-11/32	13/16	2-5/16	3/4	2-29/32	2.5630	1.000	5/8	**UC X12-38**	**FX12**	5.2
UCF X12-39	2-7/16											**UC X12-39**		
UCF X13	65	187	149	34	21	59	19	78.4	74.6	30.2	M16	**UC X13**		
UCF X13-40	2-1/2	7-23/64	5-55/64	1-11/32	13/16	2-5/16	3/4	3-3/32	2.9370	1.189	5/8	**UC X13-40**	**FX13**	5.3
UCF X13-41	2-9/16											**UC X13-41**		
UCF X14	70	197	152	37	24	60	23	81.5	77.8	33.3	M20	**UC X14**		
UCF X14-42	2-5/8											**UC X14-42**		
UCF X14-43	2-11/16	7-3/4	5-63/64	1-29/64	15/16	2-3/8	29/32	3-13/64	3.0630	1.311	3/4	**UC X14-43**	**FX14**	7.3
UCF X14-44	2-3/4											**UC X14-44**		
UCF X15	75	197	152	40	24	68	23	89.3	82.6	33.3	M20	**UC X15**		
UCF X15-45	2-13/16											**UC X15-45**		
UCF X15-46	2-7/8	7-3/4	5-63/64	1-37/64	15/16	2-11/16	29/32	3-33/64	3.2520	1.311	3/4	**UC X15-46**	**PX15**	8.1
UCF X15-47	2-15/16											**UC X15-47**		
UCF X15-48	3											**UC X15-48**		
UCF X16	80	214	171	40	24	70	23	91.6	85.7	34.1	M20	**UC X16**		
UCF X16-49	3-1/16											**UC X16-49**		
UCF X16-50	3-1/8	8-7/16	6-47/64	1-37/64	15/16	2-3/4	29/32	3-39/64	3.3740	1.343	3/4	**UC X16-50**	**PX16**	9.9
UCF X16-51	3-3/16											**UC X16-51**		
UCF X16-52	3-1/4											**UC X16-52**		
UCF X17	85	214	171	40	24	70	23	96.3	96	39.7	M20	**UC X17**		11
UCF X17-53	3-5/16	8-7/16	6-47/64	1-37/64	15/16	2-3/4	29/32	3-25/32	3.7795	1.563	3/4	**UC X17-53**	**PX17**	
UCF X17-55	3-7/16											**UC X17-55**		

FBJ®

Flange Units

UCF 3 Series

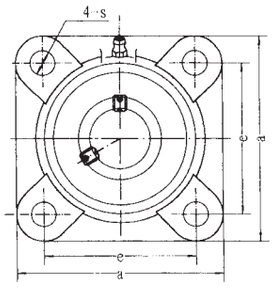

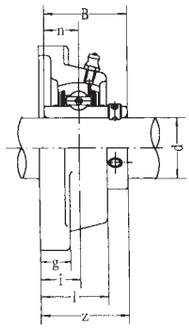

Unit No.	Dimensions mm / inch										Bolt Size mm / inch	Bearing No.	Housing No.	Weight (kg)
	d	a	e	i	g	l	s	z	B	n				
UCF 305	25	110	80	16	13	29	16	39	38	15	M14	**UC 305**		
UCF 305-13	13/16											**UC 305-13**		
UCF 305-14	7/8											**UC 305-14**	**F305**	1.1
UCF 305-15	15/16	4-11/32	3-5/32	5/8	1/2	1-5/32	5/8	1-17/32	1.4961	0.591	1/2	**UC 305-15**		
UCF 305-16	1											**UC 305-16**		
UCF 306	30	125	95	18	15	32	16	44	43	17	M14	**UC 306**		
UCF 306-17	1-1/16	4-29/32	3-37/64	45/64	19/32	1-1/4	5/8	1-47/64	1.6929	0.669	1/2	**UC 306-17**	**F306**	1.6
UCF 306-18	1-1/8											**UC 306-18**		
UCF 306-19	1-3/16											**UC 306-19**		
UCF 307	35	135	100	20	16	36	19	49	48	19	M16	**UC 307**		
UCF 307-20	1-1/4											**UC 307-20**		
UCF 307-21	1-5/16	5-5/16	3-15/16	25/32	5/8	1-13/32	3/4	1-59/64	1.8898	0.748	5/8	**UC 307-21**	**F307**	
UCF 307-22	1-3/8											**UC 307-22**		2
UCF 307-23	1-7/16											**UC 307-23**		
UCF 308	40	150	112	23	17	40	19	56	52	19	M16	**UC 308**		
UCF 308-24	1-1/2	5-29/32	4-13/32	29/32	21/32	1-9/16	3/4	2-13/64	2.0472	0.748	5/8	**UC 308-24**	**F308**	2.7
UCF 308-25	1-9/16											**UC 308-25**		
UCF 309	45	160	125	25	18	44	19	60	57	22	M16	**UC 309**		
UCF 309-26	1-5/8											**UC 309-26**	**F209**	
UCF 309-27	1-11/16	6-5/16	4-59/64	63/64	23/32	1-23/32	3/4	2-23/64	2.2441	0.866	5/8	**UC 309-27**		3.4
UCF 309-28	1-3/4											**UC 309-28**		
UCF 310	50	175	132	28	19	48	23	67	61	22	M20	**UC 310**		
UCF 310-29	1-13/16											**UC 310-29**		
UCF 310-30	1-7/8	6-7/8	5-13/64	1-7/64	3/4	1-7/8	29/32	2-41/64	2.4016	0.866	3/4	**UC 310-30**	**F310**	4.5
UCF 310-31	1-15/16											**UC 310-31**		
UCF 311	55	185	140	30	20	52	23	71	66	25	M20	**UC 311**		
UCF 311-32	2											**UC 311-32**		
UCF 311-33	2-1/16	7-9/32	5-33/64	1-3/16	25/32	2-1/16	29/32	2-51/64	2.5984	0.948	3/4	**UC 311-33**	**F311**	5.5
UCF 311-34	2-1/8											**UC 311-34**		
UCF 311-35	2-3/16											**UC 311-35**		
UCF 312	60	195	150	33	22	56	23	78	71	26	M20	**UC 312**		
UCF 312-36	2-1/4											**UC 312-36**		
UCF 312-37	2-5/16	7-11/16	5-29/32	1-19/64	7/8	2-7/32	29/32	3-5/64	1.024	1.024	3/4	**UC 312-37**	**F312**	6.5
UCF 312-38	2-3/8											**UC 312-38**		
UCF 312-39	2-7/16											**UC 312-39**		
UCF 313	65	208	166	33	22	58	23	78	75	30	M20	**UC 313**		
UCF 313-40	2-1/2	8-3/16	6-17/32	1-19/64	55/64	2-9/32	29/32	3-5/64	2.9528	1.818	3/4	**UC 313-40**	**F313**	7.9
UCF 313-41	2-9/16											**UC 313-41**		
UCF 314	70	226	178	36	25	61	25	81	78	33	M22	**UC 314**		
UCF 314-42	2-5/8											**UC 314-42**		
UCF 314-43	2-11/16	8-29/32	6-1/64	1-27/64	31/32	2-13/32	63/64	3-3/16	3.0708	1.299	7/8	**UC 314-43**	**F314**	9.5
UCP 314-44	2-3/4											**UC 314-44**		
UCF 315	75	236	184	39	25	66	25	89	82	32	M22	**UC 315**		
UCF 315-45	2-13/16											**UC 315-45**		
UCF 315-46	2-7/8											**UC 315-46**	**F315**	1.2
UCF 315-47	2-15/16	9-19/32	7-1/4	1-17/32	31/32	2-19/32	63/64	3-1/2	3.2283	1.260	7/8	**UC 315-47**		
UCF 315-48	3											**UC 315-48**		
UCF 316	80	250	196	38	27	68	31	90	86	34	M27	**UC 316**		
UCF 316-49	3-1/16											**UC 316-49**	**F316**	
UCF 316-50	3-1/8	9-27/32	7-23/32	1-1/2	1-1/16	2-11/16	1-7/32	3-35/64	3.3858	1.339	1	**UC 316-50**		14
UCF 316-51	3-3/16											**UC 316-51**		
UCF 317	85	260	204	44	27	74	31	100	96	40	M27	**UC 317**		
UCF 317-52	3-1/4											**UC 317-52**	**F317**	
UCF 317-53	3-5/16	10-1/4	8-1/32	1-47/64	1-1/16	2-29/32	1-7/32	3-15/16	3.7795	1.575	1	**UC 317-53**		16
UCF 317-55	3-7/16											**UC 317-55**		
UCF 318	90	280	216	44	30	76	35	100	96	40	M30	**UC 318**		
UCF 318-55	3-7/16											**UC 318-55**	**F318**	19
UCF 318-56	3-1/2	11-1/32	8-1/2	1-47/64	1-3/16	3	1-3/8	3-15/16	3.7795	1.575	1-1/8	**UC 318-56**		
UCF 319	95	290	228	59	30	94	35	121	103	41	M30	**UC 319**		
UCF 319-58	3-5/8											**UC 319-58**	**F319**	
UCF 319-59	3-11/16	11-13/32	8-31/32	2-21/64	1-3/16	3-11/16	1-3/8	4-49/64	4.0551	1.614	1-1/8	**UC 319-59**		22
UCF 319-60	3-3/4											**UC 319-60**		
UCF 320	100	310	242	59	32	94	38	125	108	42	M33	**UC 320**	**F320**	25.8
UCF 320-64	4	12-7/32	9-17/32	2-21/64	1-1/4	3-11/16	1-1/2	4-9/32	4.2519	1.6535	1-1/4	**UC 320-64**		

UCFS 3 Series

Flange Units

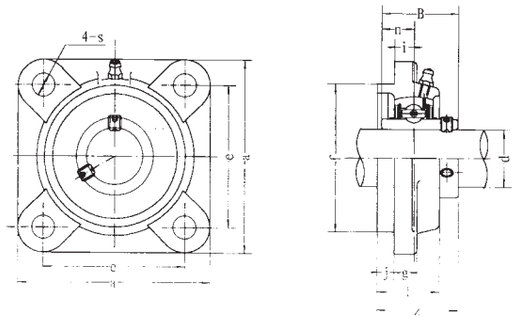

Unit No.	Dimensions mm / inch												Bolt Size mm / inch	Bearing No.	Housing No.	Weight (kg)
	d	a	e	i	S	j	k	g	f	z	B	n				
UCFS 305	25	110	80	9	16	7	13	29	80	39	38	15	M14	**UC 305**		
UCFS 305-13	13/16													**UC 305-13**		
UCFS 305-14	7/8	4-11/32	3-5/32	23/64	5/8	9/32	1/2	1-9/64	3.1496	1-17/32	1.4961	0.591	1/2	**UC 305-14**	**FS305**	1.3
UCFS 305-15	15/16													**UC 305-15**		
UCFS 305-16	1													**UC 305-16**		
UCFS 306	30	125	95	10	16	8	15	32	90	44	43	17	M14	**UC 306**		
UCFS 306-17	1-1/16													**UC 306-17**		
UCFS 306-18	1-1/8	4-29/32	3-47/64	25/64	5/8	5/16	19/32	1-17/64	3.5433	4-47/64	1.6929	0.669	1/2	**UC 306-18**	**FS306**	1.9
UCFS 306-19	1-3/16													**UC 306-19**		
UCFS 307	35	135	100	11	19	9	16	36	100	49	48	19	M16	**UC 307**		
UCFS 307-20	1-1/4													**UC 307-20**		
UCFS 307-21	1-5/16	5-5/16	3-15/16	7/16	3/4	23/64	5/8	1-13/32	3.9730	1-59/64	1.8898	0.748	5/8	**UC 307-21**	**FS307**	2.4
UCFS 307-22	1-3/8													**UC 307-22**		
UCFS 307-23	1-7/16													**UC 307-23**		
UCFS 308	40	150	112	13	19	10	17	40	115	56	52	19	M16	**UC 308**		
UCFS 308-24	1-1/2	5-29/32	4-13/32	33/64	3/4	25/64	21/32	1-9/16	4.5276	2-13/64	2.0472	0.748	5/8	**UC 308-24**	**FS308**	3.3
UCFS 308-25	1-9/16													**UC 308-25**		
UCFS 309	45	160	125	14	19	11	18	44	125	60	57	22	M16	**UC 309**		
UCFS 309-26	1-5/8													**UC 309-26**		
UCFS 309-27	1-11/16	6-5/16	4-59/64	35/64	3/4	7/16	23/32	1-47/64	4.9213	2-23/64	2.2441	0.866	5/8	**UC 309-27**	**FS309**	4.0
UCFS 309-28	1-3/4													**UC 309-28**		
UCFS 310	50	175	132	16	23	12	19	48	140	67	61	22	M20	**UC 310**		
UCFS 310-29	1-13/16													**UC 310-29**		
UCFS 310-30	1-7/8	6-7/8	5-13/64	5/8	29/32	15/32	3/4	1-57/64	5.5118	2-41/64	2.4016	0.866	3/4	**UC 310-30**	**FS310**	5.3
UCFS 310-31	1-15/16													**UC 310-31**		
UCFS 311	55	185	140	17	23	13	20	52	150	71	66	25	M20	**UC 311**		
UCFS 311-32	2													**UC 311-32**		
UCFS 311-33	2-1/16	7-9/32	5-33/64	43/64	29/32	33/64	25/32	2-3/64	5.9055	2-51/64	2.5984	0.984	3/4	**UC 311-33**	**FS311**	6.2
UCFS 311-34	2-1/8													**UC 311-34**		
UCFS 311-35	2-3/16													**UC 311-35**		
UCFS 312	60	195	150	19	23	14	22	56	160	78	71	26	M20	**UC 312**		
UCFS 312-36	2-1/4													**UC 312-36**		
UCFS 312-37	2-5/16	7-11/16	5-29/32	3/4	29/32	35/64	7/8	2-7/32	6.2922	3-5/64	2.7953	1.024	3/4	**UC 312-37**	**FX312**	7.2
UCFS 312-38	2-3/8													**UC 312-38**		
UCFS 312-39	2-7/16													**UC 312-39**		
UCFS 313	65	208	166	15	23	18	22	58	175	78	75	30	M20	**UC 313**		
UCFS 313-40	2-1/2	8-3/16	6-17/32	19/32	29/32	45/64	55/64	2-9/32	6.8898	3-5/64	2.9528	1.181	3/4	**UC 313-40**	**FX313**	8.9
UCFS 313-41	2-9/16													**UC 313-41**		
UCFS 314	70	226	178	18	25	18	25	61	185	81	78	33	M22	**UC 314**		
UCFS 314-42	2-5/8													**UC 314-42**		
UCFS 314-43	2-11/16	8-29/32	6-1/64	45/64	63/64	45/64	31/32	2-13/32	7.2835	3-3/16	3.0708	1.299	7/8	**UC 314-43**	**FS314**	11
UCFS 314-44	2-3/4													**UC 314-44**		

FBJ®

Flange Units

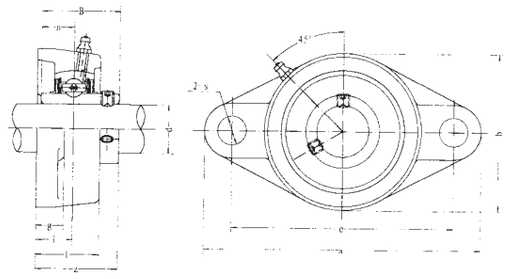

UCFL 2 Series

Unit No.	Dimensions mm / inch											Bolt Size mm / inch	Bearing No.	Housing No.	Weight (kg)
	d	a	e	i	g	l	S	b	z	B	n				
* UCFL 201	12	113	90	15	11	25.5	12	60	33.3	31	12.7	M10	UC 201	FL204	0.45
* UCFL 201-8	3/4	4-7/16	3-35/64	19/32	7/16	1	15/32	2-3/8	1-5/16	1.2205	0.500	3/8	UC 201-8		0.44
* UCFL 202	15	113	90	15	11	25.5	12	60	33.3	31	12.7	M10	UC 202		0.44
* UCFL 202-9	9/16	4-7/16	3-35/64	19/32	7/16	1	15/32	2-3/8	1-5/16	1.2205	0.500	3/8	UC 202-9	FL204	0.44
* UCFL 202-10	5/8												UC 202-10		0.44
* UCFL 203	17	113	90	15	11	25.5	12	60	33.3	31	12.7	M10	UC 203	FL204	0.43
* UCFL 203-11	11/16	4-7/16	3-35/64	19/32	7/16	1	15/32	2-3/8	1-5/16	1.2205	0.500	3/8	UC 203-11		0.42
* UCFL 204	20	113	90	15	11	25.5	12	60	33.3	31	12.7	M10	UC 204	FL204	0.41
* UCFL 204-12	3/4	4-7/16	3-35/64	19/32	7/16	1	15/32	2-3/8	1-5/16	1.2205	0.500	3/8	UC 204-12		0.41
* UCFL 205	25	130	99	16	13	27	16	68	35.8	34.1	14.3	M14	UC 205		0.58
* UCFL 205-13	13/16												UC 205-13		0.62
* UCFL 205-14	7/8	5-1/8	3-57/64	5/8	1/2	1-1/16	5/8	2-11/16	1-13/32	1.3425	0.563	1/2	UC 205-14	FL205	0.61
* UCFL 205-15	15/16												UC 205-15		0.59
* UCFL 205-16	1												UC 205-16		0.58
* UCFL 206	30	148	117	18	13	31	16	80	40.2	38.1	15.9	M14	UC 206		0.86
* UCFL 206-17	1-1/16												UC 206-17		0.89
* UCFL 206-18	1-1/8	5-13/16	4-39/64	45/64	1/2	1-7/32	5/8	3-5/32	1-19/32	1.5000	0.626	1/2	UC 206-18	FL206	0.88
* UCFL 206-19	1-3/16												UC 206-19		0.86
* UCFL 206-20	1-1/4												UC 206-20		0.85
* UCFL 207	35	161	130	19	14	34	16	90	44.4	42.9	17.5	M14	UC 207		1.08
* UCFL 207-20	1-1/4												UC 207-20		1.14
* UCFL 207-21	1-5/16	6-11/32	5-1/8	3/4	35/64	1-13/32	5/8	3-35/64	1-3/4	1.6890	0.689	1/2	UC 207-21	FL207	1.11
* UCFL 207-22	1-3/8												UC 207-22		1.08
* UCFL 207-23	1-7/16												UC 207-23		1.05
* UCFL 208	40	175	144	21	14	36	16	100	51.2	49.2	19	M14	UC 208		1.44
* UCFL 208-24	1-1/2	6-7/8	5-43/64	53/64	35/64	1-13/32	5/8	3-15/16	2-1/64	1.9370	0.748	1/2	UC 208-24	FL208	1.48
* UCFL 208-25	1-9/16												UC 208-25		1.45
* UCFL 209	45	188	148	22	15	38	19	108	52.2	49.2	19	M16	UC 209		1.74
* UCFL 209-26	1-5/8												UC 209-26	FL209	1.84
* UCFL 209-27	1-11/16	7-13/32	5-53/64	55/64	19/32	1-1/2	3/4	4-1/4	2-1/16	1.9370	0.748	5/8	UC 209-27		1.80
* UCFL 209-28	1-3/4												UC 209-28		1.76
* UCFL 210	50	197	157	22	15	40	19	115	54.6	51.6	19	M16	UC 210		2.10
* UCFL 210-29	1-13/16												UC 210-29		2.22
* UCFL 210-30	1-7/8	7-3/4	6-3/16	55/64	19/32	1-37/64	3/4	4-17/32	2-5/32	2.0315	0.748	5/8	UC 210-30	FL210	2.17
* UCFL 210-31	1-15/16												UC 210-31		2.12
* UCFL 210-32	2												UC 210-32		2.08
* UCFL 211	55	224	184	25	18	43	19	130	58.4	55.6	22.2	M16	UC 211		2.91
* UCFL 211-32	2												UC 211-32		3.06
* UCFL 211-33	2-1/16	8-13/16	7-1/4	63/64	23/32	1-11/16	3/4	5-1/8	2-5/16	2.1890	0874	5/8	UC 211-33	FL211	3.00
* UCFL 211-34	2-1/8												UC 211-34		2.95
* UCFL 211-35	2-3/16												UC 211-35		2.89
* UCFL 212	60	250	202	29	18	48	23	140	68.7	65.1	25.4	M20	UC 212		3.74
* UCFL 212-36	2-1/4												UC 212-36		3.87
* UCFL 212-37	2-5/16	9-27/32	7-61/64	1-9/64	23/32	1-7/8	29/32	5-1/2	2-23/32	2.5630	1.000	3/4	UC 212-37	FL212	3.79
* UCFL 212-38	2-3/8												UC 212-38		3.72
* UCFL 212-39	2-7/16												UC 212-39		3.65
UCFL 213	65	258	210	30	22	50	23	155	69.7	65.1	25.4	M20	UC 213		4.57
UCFL 213-40	2-1/2	10-5/32	8-17/64	1-3/16	7/8	1-31/32	29/32	6-3/32	2-3/4	2.5630	1.000	3/4	UC 213-40	FL213	4.66
UCFL 213-41	2-9/16												UC 213-41		4.57
UCFL 214	70	265	216	31	22	54	23	160	75.4	74.6	30.2	M20	UC 214		5.11
UCFL 214-42	2-5/8												UC 214-42	FL214	5.32
UCFL 214-43	2-11/16	10-7/16	8-1/2	1-7/32	7/8	2-1/8	29/32	6-5/16	2-31/32	2.9370	1.189	3/4	UC 214-43		5.22
UCFL 214-44	2-3/4												UC 214-44		5.12
UCFL 215	75	275	225	34	22	56	23	165	78.5	77.8	33.3	M20	UC 215		5.37
UCFL 215-45	2-13/16												UC 215-45		5.62
UCFL 215-46	2-7/8	10-13/16	8-55/64	1-11/32	7/8	2-7/32	29/32	6-1/2	3-3/32	3.0630	1.311	3/4	UC 215-46	FL215	5.51
UCFL 215-47	2-15/16												UC 215-47		5.40
UCFL 215-48	3												UC 215-48		5.28
UCFL 216	80	290	233	34	22	58	25	180	83.3	82.6	33.3	M22	UC 216		7.20
UCFL 216-49	3-1/16												UC 216-49	FL216	7.38
UCFL 216-50	3-1/8	11-13/32	9-11/64	1-11/32	7/8	2-9/32	63/64	7-3/32	3-9/32	3.2520	1.311	7/8	UC 216-50		7.25
UCFL 216-51	3-1/16												UC 216-51		7.12
UCFL 217	85	305	248	36	24	63	25	190	87.6	85.7	34.1	M22	UC 217		8.61
UCFL 217-52	3-1/4												UC 217-52	FL217	8.83
UCFL 217-53	3-5/16	12	9-49/64	1-27/64	15/16	2-15/32	63/64	7-15/32	3-7/16	3.3740	1.343	7/8	UC 217-53		8.69
UCFL 217-55	3-7/16												UC 217-55		8.40
UCFL 218	90	320	265	40	24	68	25	205	96.3	96	39.7	M22	UC 218	FL218	10.51
UCFL 218-56	3-1/2	12-19/32	10-7/16	1-37/64	15/16	2-11/16	63/64	8-1/16	3-25/32	3.7795	1.5630	7/8	UC 218-56		10.62

* **Add SS in front of the Unit No for Stainless Steel Bearing and Housing with plastic cover (Eg. SS UCFL 205)**
* **Add SP in front of the Unit No for Stainless Steel Bearing with Thermo-Plastic Housing (Eg. SP UCFL 205)**

Add C as suffix for both side Open cover (Eg. SP UCFL 205 C)
or CD as suffix for one side Open & one side Closed cover (Eg. SP UCFL 205 CD)

UKFL 2 Series

Flange Units
(Adapter mounted)

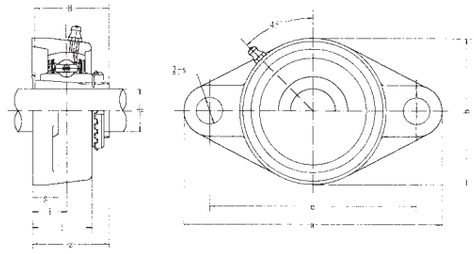

Unit No.	Dimensions mm / inch										Bolt Size mm / inch	Bearing No.	No.	Housing No.	Weight (kg)
	d	a	e	i	g	l	S	b	z	B					
UKFL 205	20 3/4	130 5-1/8	99 3-57/64	16 5/8	13 1/2	27 1-1/16	16 5/8	68 2-11/16	35.5 1-25/64	35 1.378	M14 1/2	**UK 205**	**H305** **HE305**	**FL205**	0.63
UKFL 206	25 7/8 1	148 5-13/16	117 4-39/64	18 45/64	13 1/2	31 1-7/32	16 5/8	80 3-5/32	39 1-17/32	38 1.496	M14 1/2	**UK 206**	**H306** **HS306** **HE306**	**FL206**	0.90
UKFL 207	30 1-1/8	161 6-11/32	130 5-1/8	19 3/4	14 35/64	34 1-11/32	16 5/8	90 3-35/64	42.5 1-43/64	43 1.693	M14 1/2	**UK 207**	**H307** **HS307**	**FL207**	1.17
UKFL 208	35 1-1/4 1-3/8	175 6-7/8	144 5-43/64	21 53/64	14 35/64	36 1-13/32	16 5/8	100 3-15/16	46.5 1-53/64	46 1.811	M14 1/2	**UK 208**	**H308** **HE308** **H309**	**FL208**	1.54
UKFL 209	40 1-7/16 1-1/2 1-5/8	188 7-13/32	148 5-53/64	22 55/64	15 19/32	38 1-1/2	19 3/4	108 4-1/4	48.5 1-29/32	50 1.969	M16 5/8	**UK 209**	**HA309** **HE309** **HS309** **H310**	**FL209**	1.89
UKFL 210	45 1-5/8 1-11/16 1-3/4	197 7-3/4	157 6-3/16	22 55/64	15 19/32	40 1-37/64	19 3/4	115 4-17/32	50 1-31/32	55 2.165	M16 5/8	**UK 210**	**H310** **HS310** **HA310** **HE310**	**FL210**	2.27
UKFL 211	50 1-7/8 1-15/16 2	224 8-13/16	184 7-1/4	25 63/64	18 23/32	43 1-11/16	19 3/4	130 5-1/8	54.5 2-9/64	59 2.323	M16 5/8	**UK 211**	**H311** **HS311** **HA311** **HE311**	**FL211**	3.06
UKFL 212	55 2-1/8	250 9-17/32	202 7-61/64	29 1-9/64	18 23/32	48 1-7/8	23 29/32	140 5-1/2	61 2-13/32	62 2.441	M20 3/4	**UK 212**	**H312** **HS312**	**FL212**	3.79
UKFL 213	60 2-3/16 2-1/4 2-3/8	258 10-5/32	210 8-17/64	30 1-3/16	22 7/8	50 1-31/32	23 29/32	155 6-3/32	64 2-33/64	65 2.559	M20 3/4	**UK 213**	**H313** **HA313** **HE313** **HS313**	**FL213**	4.48
UKFL 215	65 2-7/16 2-1/2	275 10-13/16	225 8-55/64	34 1-11/32	22 7/8	56 2-7/32	23 29/32	165 6-1/2	71 2-51/64	73 2.874	M20 3/4	**UK 215**	**H315** **HA315** **HE315**	**FL215**	5.48
UKFL 216	70 2-11/16 2-3/4	290 11-13/32	233 9-11/64	34 1-11/32	22 7/8	58 2-9/32	25 63/64	180 7-3/32	73.5 2-57/64	78 3.071	M22 7/8	**UK 216**	**H316** **HA316** **HE316**	**FL216**	7.46
UKFL 217	75 2-15/16 3	305 12	248 9-46/64	36 1-27/64	24 15/16	63 2-15/32	25 63/64	190 7-15/32	77 3-1/32	82 3.228	M22 7/8	**UK 217**	**H317** **HA317** **HE317**	**FL217**	9.03
UKFL 218	80 3-3/16	320 12-19/32	265 10-7/16	40 1-37/64	24 15/16	68 2-11/16	25 63/54	205 8-1/16	81.5 3-13/64	86 3.386	M22 7/8	**UK 218**	**H318** **HA318**	**FL218**	10.89

FBJ®

Flange Units
(with Eccentric Locking Collar)

NAFL 2 Series

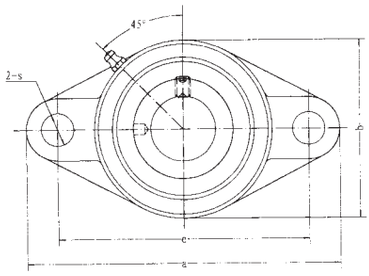

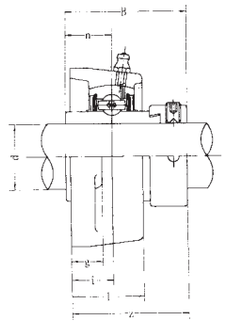

Unit No.	Dimensions mm / inch											Bolt Size mm / inch	Bearing No.	Housing No.	Weight (kg)
	d	a	e	i	g	l	s	b	z	B	n				
NAFL 204	20	113	90	15	11	25.5	12	60	41.6	43.7	17.1	M10	**NA 204**	**FL204**	0.48
NAFL 204-12	3/4	4-7/16	3-35/64	19/32	7/16	1	15/32	2-3/8	1-41/64	1.720	0.673	3/8	**NA 204-12**		0.48
NAFL 205	25	130	99	16	13	27	16	68	42.9	44.4	17.5	M14	**NA 205**		0.65
NAFL 205-13	13/16												**NA 205-13**		0.70
NAFL 205-14	7/8	5-1/8	3-57/64	5/8	1/2	1-1/16	5/8	2-11/16	1-11/16	1.748	0.689	1/2	**NA 205-14**	**FL205**	0.69
NAFL 205-15	15/16												**NA 205-15**		0.67
NAFL 205-16	1												**NA 205-16**		0.65
NAFL 206	30	148	117	18	13	31	16	80	48.1	48.4	18.3	M14	**NA 206**		0.99
NAFL 206-17	1-1/16												**NA 206-17**		1.04
NAFL 206-18	1-3/8	5-13/16	4-39/64	45/64	1/2	1-7/32	5/8	3-5/32	1-57/64	1.906	0.720	1/2	**NA 206-18**	**FL206**	1.01
NAFL 206-19	1-3/16												**NA 206-19**		0.99
NAFL 206-20	1-1/4												**NA 206-20**		0.96
NAFL 207	35	161	130	19	14	34	16	90	51.3	51.1	18.8	M14	**NA 207**		1.20
NAFL 207-20	1-1/4												**NA 207-20**		1.27
NAFL 207-21	1-5/16	6-11/32	5-1/8	3/4	35/64	1-11/32	5/8	3-35/64	2-1/64	2.012	0.740	1/2	**NA 207-21**	**FL207**	1.23
NAFL 207-22	1-3/8												**NA 207-22**		1.20
NAFL 207-23	1-7/16												**NA 208-23**		1.17
NAFL 208	40	175	144	21	14	36	16	100	55.9	56.3	21.4	M14	**NA 208**		1.59
NAFL 208-24	1-1/2	6-7/8	5-43/64	53/64	35/64	1-18/32	5/8	3-15/16	2-13/64	2.217	0.843	1/2	**NA 208-24**	**FL208**	1.64
NAFL 208-25	1-9/16												**NA 208-25**		1.60
NAFL 209	45	188	148	22	15	38	19	108	56.9	56.3	21.4	M16	**NA 209**		1.91
NAFL 209-26	1-5/8												**NA 209-26**	**FL209**	2.02
NAFL 209-27	1-11/16	7-13/32	5-53/64	55/64	19/32	1-1/2	3/4	4-1/4	2-15/64	2.217	0.843	5/8	**NA 209-27**		1.97
NAFL 209-28	1-3/4												**NA 209-28**		1.93
NAFL 210	50	197	157	22	15	40	19	115	60.1	62.7	24.6	M16	**NA 210**		2.29
NAFL 210-29	1-13/16												**NA 210-29**		2.44
NAFL 210-30	1-7/8	7-3/4	6-3/16	55/64	19/32	1-37/64	3/4	4-17/32	2-23/64	2.469	0.969	5/8	**NA 210-30**	**FL210**	2.38
NAFL 210-31	1-15/16												**NA 210-31**		2.32
NAFL 210-32	2												**NA 210-32**		2.26
NAFL 211	55	224	184	25	18	43	19	130	68.6	71.4	27.8	M16	**NA 211**		3.12
NAFL 211-32	2												**NA 211-32**		3.32
NAFL 211-33	2-1/16	8-13/16	7-1/4	63/64	23/32	1-11/16	3/4	5-1/8	2-45/64	2.811	1.094	5/8	**NA 211-33**	**FL211**	3.24
NAFL 211-34	2-1/8												**NA 211-34**		3.17
NAFL 211-35	2-3/16												**NA 211-35**		3.09
NAFL 212	60	250	202	29	18	48	23	140	75.8	77.8	31	M20	**NA 212**		4.08
NAFL 212-36	2-4/1												**NA 212-36**		4.24
NAFL 212-37	2-5/16	9-27/32	7-61/64	1-9/64	23/32	1-7/8	29/32	5-1/2	2-63/64	3.063	1.220	3/4	**NA 212-37**	**FL212**	4.15
NAFL 212-38	2-3/8												**NA 212-38**		4.10
NAFL 212-39	2-7/16												**NA 212-39**		3.97
NAFL 213	65	258	210	30	22	50	23	155	81.6	85.7	34.1	M20	**NA 213**		5.13
NAFL 213-40	2-1/2												**NA 213-40**	**FL213**	5.23
NAFL 213-41	2-9/16	10-5/32	8-17/64	1-3/16	7/8	1-31/32	29/32	6-3/32	3-7/32	3.374	1.343	3/4	**NA 213-41**		5.12
NAFL 214	70	265	216	31	22	54	23	160	82.6	85.7	34.1	M20	**NA 214**		5.61
NAFL 214-42	2-3/8												**NA 214-42**	**FL214**	5.85
NAFL 214-43	2-3/4	10-7/16	8-1/2	1-7/32	7/8	2-1/8	29/32	6-5/16	3-1/4	3.374	1.343	3/4	**NA 213-43**		5.12
NAFL 214-44	2-3/4												**NA 214-44**		5.62
NAFL 215	75	275	225	34	22	56	23	165	88.8	92.1	37.3	M20	**NA 215**		6.00
NAFL 215-45	2-13/16												**NA 215-45**		6.30
NAFL 214-46	2-7/8	10-13/16	8-55/64	1-11/32	7/8	2-7/32	29/32	6-1/2	3-1/2	3.626	1.426	3/4	**NA 215-46**	**FL215**	6.17
NAFL 214-47	2-15/16												**NA 215-47**		6.04
NAFL 214-48	3												**NA 215-48**		5.90

UCFLX Series

Flange Units

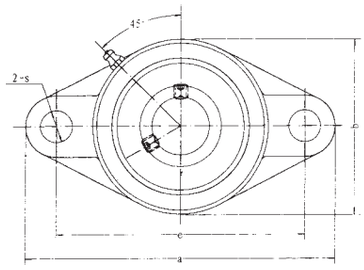

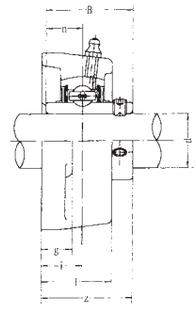

Unit No.	Dimensions mm / inch											Bolt Size mm / inch	Bearing No.	Housing No.	Weight (kg)
	d	a	e	i	g	l	s	b	z	B	n				
UCFL X05	25	141	117	18	13	30	12	83	40.2	38.1	15.9	M10	**UC X05**		
UCFL X05-13	13/16												**UC X05-13**		
UCFL X05-14	7/8	5-9/16	4-39/64	45/64	1/2	1-3/16	15/32	3-9/32	1-37/64	1.5000	0.626	3/8	**UC X05-14**	**FLX05**	1.0
UCFL X05-15	15/16												**UC X05-15**		
UCFL X05-16	1												**UC X05-16**		
UCFL X06	30	156	130	19	15	34	16	95	44.4	42.9	17.5	M14	**UC X06**		
UCFL X06-17	1-1/16												**UC X06-17**		
UCFL X06-18	1-1/8	6-5/32	5-1/8	3/4	19/32	1-11/32	5/8	3-3/4	1-3/4	1.6890	0.689	1/2	**UC X06-18**	**FLX06**	1.5
UCFL X06-19	1-3/16												**UC X06-19**		
UCFL X06-20	1-1/4												**UC X06-20**		
UCFL X07	35	171	144	21	16	38	16	105	51.2	49.2	19	M14	**UC X07**		
UCFL X07-21	1-5/16												**UC X07-21**	**FLX07**	2.0
UCFL X07-22	1-3/8	6-23/32	5-43/64	53/64	5/8	1-1/2	5/8	4-1/8	2-1/64	1.9370	0.748	1/2	**UC X07-22**		
UCFL X07-23	1-7/16												**UC X07-23**		
UCFL X08	40	179	148	22	16	40	16	111	52.2	49.2	19	M14	**UC X08**		
UCFL X08-24	1-1/2	7-1/16	5-53/64	55/64	5/8	1-9/16	5/8	4-3/8	2-1/16	1.9370	0.748	1/2	**UC X08-24**	**FLX08**	2.2
UCFL X08-25	1-9/16												**UC X08-25**		
UCFL X09	45	189	157	23	16	40	16	116	55.6	51.6	19	M14	**UC X09**		
UCFL X09-26	1-5/8												**UC X09-26**		
UCFL X09-27	1-11/16	7-7/16	6-3/16	29/32	5/8	1-37/64	5/8	4-9/16	2-3/16	2.0315	0.748	1/2	**UC X09-27**	**FLX09**	2.4
UCFL X09-28	1-3/4												**UC X09-28**		
UCFL X09-29	1-13/16												**UC X09-29**		
UCFL X10	50	216	184	26	18	44	19	133	59.4	55.6	22.2	M16	**UC X10**		
UCFL X10-30	1-7/8												**UC X10-30**	**FLX10**	3.4
UCFL X10-31	1-15/16	8-1/2	7-1/4	1-1/32	23/32	1-23/32	3/4	5-1/4	2-11/32	2.1890	0.874	5/8	**UC X10-31**		
UCFL X10-32	2												**UC X11-32**		

FBJ®

Flange Units

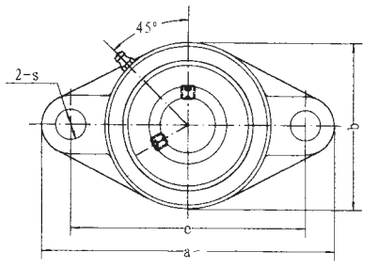

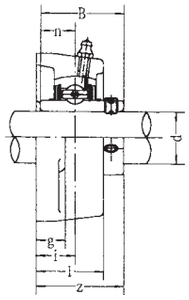

UCFL 3 Series

Unit No.	Dimensions mm / inch d	a	e	i	g	l	s	b	z	B	n	Bolt Size mm / inch	Bearing No.	Housing No.	Weight (kg)
UCFL 305	25	150	113	16	13	29	19	80	39	38	15	M16	**UC 305**		
UCFL 305-13	13/16												**UC 305-13**		
UCFL 305-14	7/8	5-29/32	4-7/16	5/8	1/2	1-5/32	3/4	3-5/32	1-17/32	1.4961	0.591	5/8	**UC 305-14**	**FL305**	1.1
UCFL 305-15	15/16												**UC 305-15**		
UCFL 305-16	1												**UC 305-16**		
UCFL 306	30	180	134	18	15	32	23	90	44	43	17	M20	**UC 306**		
UCFL 306-17	1-1/16												**UC 306-17**		
UCFL 306-18	1-1/8	7-3/32	5-9/32	45/64	19/32	1-1/4	29/32	3-17/32	1-47/64	1.6929	0.669	3/4	**UC 306-18**	**FL306**	1.5
UCFL 306-19	1-3/16												**UC 306-19**		
UCFL 307	35	185	141	20	16	36	23	100	49	48	19	M20	**UC 307**		
UCFL 307-20	1-1/4												**UC 307-20**		
UCFL 307-21	1-5/16	7-9/32	5-35/64	25/32	5/8	1-13/32	29/32	3-15/16	1-59/64	1.8898	0.748	3/4	**UC 307-21**	**FL307**	1.9
UCFL 307-22	1-3/8												**UC 307-22**		
UCFL 307-23	1-7/16												**UC 307-23**		
UCFL 308	40	200	158	23	17	40	23	112	56	52	19	M20	**UC 308**		
UCFL 308-24	1-1/2	7-7/8	5-7/32	29/32	21/32	1-9/16	29/32	4-13/32	1-13/64	2.0472	0.748	3/4	**UC 308-24**	**FL308**	2.5
UCFL 308-25	1-9/16												**UC 308-25**		
UCFL 309	45	230	177	25	18	44	25	125	60	57	22	M22	**UC 309**		
UCFL 309-26	1-5/8												**UC 309-26**		
UCFL 309-27	1-11/16	9-1/16	6-31/32	63/64	23/32	1-23/32	63/64	4-29/32	2-23/64	2.2441	0.866	7/8	**UC 309-27**	**FL309**	3.4
UCFL 309-28	1-3/4												**UC 309-28**		
UCFL 310	50	240	187	28	19	48	25	140	67	61	22	M22	**UC 310**		
UCFL 310-29	1-13/16												**UC 310-29**		
UCFL 310-30	1-7/8	9-7/16	7-23/64	1-7/64	3/4	1-7/8	63/64	5-1/2	2-41/64	2.4016	0.866	7/8	**UC 310-30**	**FL310**	4.4
UCFL 310-31	1-15/16												**UC 310-31**		
UCFL 311	55	250	198	30	20	52	25	150	71	66	25	M22	**UC 311**		
UCFL 311-32	2												**UC 311-32**		
UCFL 311-33	2-1/16												**UC 311-33**	**FL311**	5.1
UCFL 311-34	2-1/8	9-27/32	7-51/64	1-3/16	25/32	2-1/16	63/64	5-29/32	2-51/64	2.5984	0.948	7/8	**UC 311-34**		
UCFL 311-35	2-3/16												**UC 311-35**		
UCFL 312	60	270	212	33	22	56	31	160	78	71	26	M27	**UC 312**		
UCFL 312-36	2-1/4												**UC 312-36**		
UCFL 312-37	2-5/16	10-5/8	8-11/32	1-19/64	7/8	2-7/32	1-7/32	6-5/64	3-5/64	2.9753	1.024	1	**UC 312-37**	**FL312**	6.1
UCFL 312-38	2-3/8												**UC 312-38**		
UCFL 312-39	2-7/16												**UC 312-39**		
UCFL 313	65	295	240	33	25	58	31	175	78	75	30	M27	**UC 313**		
UCFL 313-40	2-1/2	11-5/8	9-29/64	1-19/64	31/32	2-9/32	1-7/32	6-7/8	3-5/64	2.9528	1.181	1	**UC 313-40**	**FL313**	7.8
UCFL 313-41	2-9/16												**UC 313-41**		
UCFL 314	70	315	250	36	28	61	35	185	81	78	33	M20	**UC 314**		
UCFL 314-42	2-5/8												**UC 314-42**		
UCFL 314-43	2-11/16	12-13/32	9-27/32	1-27/64	1-3/32	2-13/32	1-3/8	7-9/32	3-3/16	3.0708	1.299	1-1/8	**UC 314-43**	**FL314**	9.0
UCFL 314-44	2-3/4												**UC 314-44**		
UCFL 315	75	320	260	39	30	66	35	195	89	82	32	M30	**UC 315**		
UCFL 315-45	2-13/16												**UC 315-45**		
UCFL 315-46	2-7/8	12-19/32	10-15/64	1-17/32	1-3/16	2-19/32	1-3/8	7-11/16	3-1/2	3.2283	1.260	1-1/8	**UC 315-46**	**FL315**	10
UCFL 315-47	2-15/16												**UC 315-47**		
UCFL 315-48	3												**UC 315-48**		
UCFL 316	80	355	285	38	32	68	38	210	90	86	34	M33	**UC 316**		
UCFL 316-49	3-1/16												**UC 316-49**		
UCFL 316-50	3-1/8	13-31/32	11-7/32	1-1/2	1-1/4	2-11/16	1-1/2	8-9/32	3-35/64	3.3858	1.339	1-1/4	**UC 316-50**	**FL316**	13
UCFL 316-51	3-3/16												**UC 316-51**		
UCFL 317	85	370	300	44	32	74	38	220	100	96	40	M33	**UC 317**		
UCFL 317-52	3-1/4												**UC 317-52**		
UCFL 317-53	3-5/16	14-9/16	11-13/14	1-47/64	1-1/4	2-29/32	1-1/2	8-21/32	3-15/16	3.7795	1.575	1-1/4	**UC 317-53**	**FL317**	15
UCFL 317-55	3-7/16												**UC 317-55**		
UCFL 318	90	385	315	44	36	76	38	235	100	96	40	M33	**UC 318**		
UCFL 318-55	3-7/16	15-5/32	12-13/32	1-47/64	1-13/32	3	1-1/2	9-1/4	3-15/16	3.7795	1.575	1-1/4	**UC 317-55**	**FL318**	18
UCFL 318-56	3-1/2												**UC 318-56**		
UCFL 319	95	405	330	59	40	94	41	250	121	103	41	M36	**UC 319**		
UCFL 319-58	3-5/8												**UC 319-58**		
UCFL 319-59	3-11/16	15-15/16	12-63/64	2-21/64	1-9/16	3-11/16	1-39/64	9-27/32	4-49/64	4.0551	1.614	1-3/8	**UC 319-59**	**FL319**	22
UCFL 319-60	3-3/4												**UC 319-60**		

UCFC 2 Series

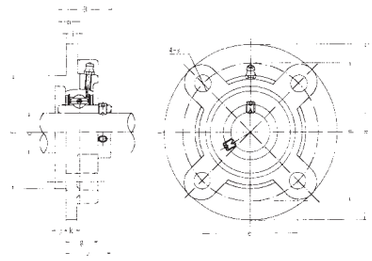

Flange Units

Unit No.	Dimensions mm / inch													Bolt Size mm / inch	Bearing No.	Housing No.	Weight (kg)
	d	a	p	e	i	S	j	k	g	f	z	B	n				
UCFC 201	12	100	78	55.1	10	12	5	7	20.5	62	28.3	31	12.7	M10	**UC 201**	**FC204**	0.73
UCFC 201-8	3/4	3-15/16	3-5/64	2-11/64	25/64	15/32	13/64	9/32	13/16	2.4409	1-1/8	1.2205	0.500	3/8	**UC 201-8**		0.72
UCFC 202	15	100	78	55.1	10	12	5	7	20.5	62	28.3	31	12.7	M10	**UC 202**		0.72
UCFC 202-9	9/16	3-15/16	3-5/64	2-11/64	25/64	15/32	13/64	9/32	13/16	2.4409	1-1/8	1.2205	0.500	3/8	**UC 202-9**	**FC204**	0.72
UCFC 202-10	5/8														**UC 202-10**		0.72
UCFC 203	17	100	78	55.1	10	12	5	7	20.5	62	28.3	31	12.7	M10	**UC 203**	**FC204**	O.71
UCFC 203-11	11/16	3-15/16	3-5/64	2-11/64	25/64	15/32	13/64	9/32	13/16	2.4409	1-1/8	1.2205	0.500	3/8	**UC 203-11**		0.70
UCFC 204	20	100	78	55.1	10	12	5	7	20.5	62	28.3	31	12.7	M10	**UC 204**	**FC204**	0.69
UCFC 204-12	3/4	3-15/16	3-5/64	2-11/64	25/64	15/32	13/64	9/32	13/16	2.4409	1-1/8	1.2205	0.500	3/8	**UC 204-12**		0.69
UCFC 205	25	115	90	63.6	10	12	6	7	21	70	29.8	34.1	14.3	M10	**UC 205**		1.00
UCFC 205-13	13/16														**UC 205-13**		1.04
UCFC 205-14	7/8	4-17/32	3-35/64	2-1/12	25/64	15/32	15/64	9/32	53/64	2.7559	1-11/64	1.3425	0.563	3/8	**UC 205-14**	**FC205**	1.03
UCFC 205-15	15/16														**UC 205-15**		1.01
UCFC 205-16	1														**UC 205-16**		1.00
UCFC 206	30	125	100	70.7	10	12	8	8	23	80	32.2	38.1	15.9	M10	**UC 206**		1.30
UCFC 206-17	1-1/16														**UC 206-17**		1.31
UCFC 206-18	1-1/8	4-59/64	3-15/16	2-25/32	25/64	15/32	5/16	5/16	29/32	3.1496	1-17/64	1.5000	0.626	3/8	**UC 206-18**	**FC206**	1.32
UCFC 206-19	1-3/16														**UC 206-19**		1.30
UCFC 206-20	1-1/4														**UC 206-20**		1.29
UCFC 207	35	135	110	77.8	11	14	8	9	26	90	36.4	42.9	17.5	M12	**UC 207**		1.81
UCFC 207-20	1-1/4														**UC 207-20**		1.87
UCFC 207-21	1-5/16	5-5/16	4-21/64	3-1/16	7/16	35/64	5/16	23/64	1-1/32	3.5433	1-7/16	1.6890	0.689	7/16	**UC 207-21**	**FC207**	1.84
UCFC 207-22	1-3/8														**UC 207-22**		1.81
UCFC 207-23	1-7/16														**UC 207-23**		1.78
UCFC 208	40	145	120	84.8	11	14	10	9	26	100	41.2	49.2	19	M12	**UC 208**		2.14
UCFC 208-24	1-1/2	5-45/64	4-23/32	3-11/32	7/16	35/64	25/64	23/64	1-1/32	3.9370	1-5/8	1.9370	0.748	7/16	**UC 208-24**	**FC208**	2.18
UCFC 208-25	1-9/16														**UC 208-25**		2.15
UCFC 209	45	160	132	93.3	10	16	12	14	26	105	40.2	49.2	19	M14	**UC 209**		2.68
UCFC 209-26	1-5/8														**UC 209-26**	**FC209**	2.78
UCFC 209-27	1-11/16	6-19/64	5-13/64	3-43/64	25/64	5/8	15/32	35/64	1-1/32	4.1339	1-37/64	1.9370	0.748	1/2	**UC 209-27**		2.74
UCFC 209-28	1-3/4														**UC 209-28**		2.70
UCFC 210	50	165	138	97.6	10	16	12	14	28	110	42.6	51.6	19	M14	**UC 210**		2.90
UCFC 210-29	1-13/16														**UC 210-29**		3.02
UCFC 210-30	1-7/8	6-1/2	5-7/16	3-27/32	25/64	5/8	15/32	35/64	1-7/64	4.3307	1-11/16	2.0315	0.748	1/2	**UC 210-30**	**FC210**	2.97
UCFC 210-31	1-15/16														**UC 210-31**		2.92
UCFC 210-32	2														**UC 210-32**		2.88
UCFC 211	55	185	150	106.1	13	19	12	15	31	125	46.4	55.6	22.2	M16	**UC 211**		4.01
UCFC 211-32	2														**UC 211-32**		4.16
UCFC 211-33	2-1/16	7-9/32	5-29/32	4-3/16	33/64	3/4	15/32	19/32	1-7/32	4.9213	1-53/64	2.1890	0.874	5/8	**UC 211-33**	**FC211**	4.10
UCFC 211-34	2-1/8														**UC 211-34**		4.05
UCFC 211-35	2-3/16														**UC 211-35**		3.99
UCFC 212	60	195	160	113.1	17	19	12	15	36	135	56.7	65.1	25.4	M16	**UC 212**		4.94
UCFC 212-36	2-1/4														**UC 212-36**		5.07
UCFC 212-37	2-5/16	7-11/16	6-19/64	4-29/64	43/64	3/4	15/32	19/32	1-27/64	5.3150	2-15/64	2.5630	1.000	5/8	**UC 212-37**	**FC212**	4.99
UCFC 212-38	2-3/8														**UC 212-38**		4.92
UCFC 212-39	2-7/16														**UC 212-39**		4.85
UCFC 213	65	205	170	120.2	16	19	14	15	36	145	55.7	65.1	25.4	M16	**UC 213**		5.65
UCFC 213-40	2-1/2	8-5/64	6-11/16	4-47/64	5/8	3/4	35/64	19/32	1-27/64	5.5118	1-3/16	2.5630	1.000	5/8	**UC 213-40**	**FC213**	5.74
UCFC 213-41	2-9/16														**UC 213-41**		5.65
UCFC 214	70	215	177	125.1	17	19	14	18	40	150	61.4	74.6	30.2	M16	**UC 214**		6.95
UCFC 214-42	2-5/8														**UC 214-42**	**FC214**	7.16
UCFC 214-43	2-11/16	8-15/32	6-31/32	4-59/64	43/64	3/4	35/64	23/32	1-37/64	5.9055	1-13/32	2.9370	1.189	5/8	**UC 214-43**		7.06
UCFC 214-44	2-3/4														**UC 214-44**		6.96
UCFC 215	75	220	184	130.1	18	19	16	18	40	160	62.5	77.8	33.3	M16	**UC 215**		7.56
UCFC 215-45	2-13/16														**UC 215-45**		7.81
UCFC 215-46	2-7/8	8-21/32	7-1/4	5-1/8	23/32	3/4	5/8	23/32	1-37/64	6.2992	2-15/32	3.0630	1.311	5/8	**UC 215-46**	**FC215**	7.70
UCFC 215-47	2-15/16														**UC 215-47**		7.59
UCFC 215-48	3														**UC 215-48**		7.47
UCFC 216	80	240	200	141.4	18	23	16	18	42	170	67.3	82.6	33.3	M20	**UC 216**		9.15
UCFC 216-49	3-1/16														**UC 216-49**	**FC216**	9.28
UCFC 216-50	3-1/8	9-29/64	7-7/8	5-9/16	23/32	29/32	5/8	23/32	1-21/32	6.6929	2-21/32	3.2520	1.311	3/4	**UC 216-50**		9.20
UCFC 216-51	3-3/16														**UC 216-51**		9.07
UCFC 217	85	250	208	147.1	18	23	18	20	45	180	69.6	85.7	34.1	M20	**UC 217**		10.81
UCFC 217-52	3-1/4														**UC 217-52**	**FC217**	11.03
UCFC 217-53	3-5/16	9-27/32	8-3/16	5-51/64	23/32	29/32	23/32	25/32	1-25/32	7.0866	2-3/4	3.3740	1.343	3/4	**UC 217-53**		10.89
UCFC 217-55	3-7/16														**UC 217-55**		10.60
UCFC 218	90	265	220	155.5	22	23	18	20	50	190	78.3	96	39.7	M20	**UC 218**	**FC218**	12.96
UCFC 218-56	3-1/2	10-7/16	8-21/32	6-1/8	55/64	29/32	23/32	25/32	1-31/32	7.4803	3-3/32	3.7795	1.5630	3/4	**UC 218-56**		13.07

FBJ®

Flange Units
(Adapter mounted)

UKFC 2 Series

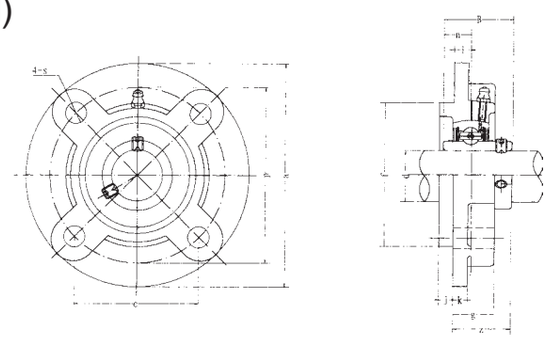

Unit No.	Dimensions mm / inch												Bolt Size mm / inch	Bearing No.	No.	Housing No.	Weight (kg)
	d	a	p	e	i	s	j	k	g	f	z	B_1					
UKFC 205	20 3/4	115 4-17/32	90 3-35/64	63.6 2-1/2	10 15/64	12 15/32	6 15/64	7 9/32	21 53/64	70 2.7559	29.5 1-5/32	35 1.378	M10 3/8	**UK 205**	**H305** **HE305**	**FC205**	1.05
UKFC 206	25 7/8 1	125 4-59/64	100 3-15/16	70.7 2-25/32	10 25/64	12 15/32	8 5/16	8 5/16	23 29/32	80 3.1496	31 1-7/32	38 1.496	M10 3/8	**UK 206**	**H306** **HS306** **HE306**	**FC206**	1.34
UKFC 207	30 1-1/8	135 5-5/16	110 4-21/64	77.8 3-1/16	11 7/16	14 35/64	8 5/16	9 23/64	26 1-1/32	90 3.5433	33.5 1-5/16	43 1.693	M12 7/16	**UK 207**	**H307** **HS307**	**FC207**	1.90
UKFC 208	35 1-1/4 1-3/8	145 5-45/64	120 4-23/32	84.8 3-11/32	11 7/16	14 35/64	10 25/64	9 23/64	26 1-1/32	100 3.9370	35.5 1-25/64	46 1.811	M12 7/16	**UK 208**	**H308** **HE308** **HS308**	**FC208**	2.24
UKFC 209	40 1-7/16 1-1/2 1-5/8	160 6-19/64	132 5-13/64	93.3 3-43/64	10 25/64	16 5/8	12 15/32	14 35/64	26 1-1/32	105 4.1339	36 1-27/64	50 1.969	M14 1-1/2	**UK 209**	**H309** **HA309** **HE309** **HS309**	**FC209**	2.83
UKFC 210	45 1-5/8 1-11/16 1-3/4	165 6-1/2	138 5-7/16	97.6 3-27/32	10 25/64	16 5/8	12 15/32	14 35/64	28 1-7/64	110 4.3307	37.5 1-15/32	55 2.165	M14 1/2	**UK 210**	**H310** **HS310** **HA310** **HE310**	**FC210**	3.07
UKFC 211	50 1-7/8 1-15/16 2	185 7-9/32	150 5-29/32	106.1 4-3/16	13 33/64	19 3/4	12 15/32	15 19/32	31 1-7/32	125 4.9213	41.5 1-41/64	59 2.323	M16 5/8	**UK 211**	**H311** **HS311** **HA311** **HE311**	**FC211**	4.16
UKFC 212	55 2-1/8	195 7-11/16	160 6-19/64	113.1 4-29/64	17 43/64	19 3/4	12 15/32	15 19/32	36 1-27/64	135 5.3150	48 1-57/64	62 2.441	M16 5/8	**UK 212**	**H312** **HS312**	**FC212**	4.99
UKFC 213	60 2-3/16 2-1/4 2-3/8	205 8-5/64	170 6-11/16	120.2 4-47/64	16 5/8	19 3/4	14 35/64	15 19/32	36 1-27/64	145 5.5118	49 1-15/16	65 2.559	M16 5/8	**UK 213**	**H313** **HA313** **HE313** **HS313**	**FC213**	5.56
UKFC 215	65 2-7/16 2-1/2	220 8-21/32	184 7-1/4	130.1 5-1/8	18 23/32	19 3/4	16 5/8	18 23/32	40 1-37/64	160 6.2992	53.5 2-7/64	73 2.874	M16 5/8	**UK 215**	**H315** **HA315** **HE315**	**FC215**	7.67
UKFC 216	70 2-11/16 2-3/4	240 9-29/64	200 7-7/8	141.4 5-9/16	18 23/32	23 29/32	16 5/8	18 23/32	42 1-21/32	170 6.6929	57 2-1/4	78 3.071	M20 3/4	**UK 216**	**H316** **HA316** **HE316**	**FC216**	9.41
UKFC 217	75 2-15/16 3	250 9-27/32	208 8-3/16	147.1 5-51/64	18 23/32	23 29/32	18 23/32	20 25/32	45 1-25/32	180 7.0866	59 2-21/64	82 3.228	M20 3/4	**UK 217**	**H317** **HA317** **HE317**	**FC217**	11.23
UKFC 218	80 3-3/16	265 10-7/16	220 8-21/32	155.5 6-1/8	22 55/64	23 29/32	18 23/32	20 25/32	50 1-31/32	190 7.4803	64.5 3-35/64	86 3.386	M20 3/4	**UK 218**	**H318** **HA318**	**FC218**	13.34

NAFC 2 Series

Flange Units

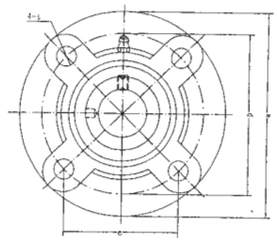

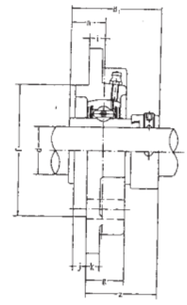

Unit No.	Dimensions mm / inch													Bolt Size mm / inch	Bearing No.	Housing No.	Weight (kg)
	d	a	p	e	i	S	j	k	g	f	z	B	n				
NAFC 204	20	100	78	55.1	10	12	5	7	20.5	62	36.6	43.7	17.1	M10	**NA 204**	**FC204**	0.76
NAFC 204-12	3/4	3-15/16	3-5/64	2-11/64	25/64	15/32	13/64	9/32	13/16	2.4409	1-7/16	0.720	0.673	3/8	**NA 204-12**		0.76
NAFC 205	25	115	90	63.6	10	12	6	7	21	70	36.9	44.4	17.5	M10	**NA 205**		1.07
NAFC 205-13	13/16														**NA 205-13**		1.12
NAFC 205-14	7/8	4-17/32	3-35/64	2-1/2	25/64	15/32	15/64	9/32	53/64	2.7559	1-29/64	1.748	0.689	3/8	**NA 205-14**	**FC205**	1.11
NAFC 205-15	15/16														**NA 205-15**		1.09
NAFC 205-16	1														**NA 205-16**		1.07
NAFC 206	30	125	100	70.7	10	12	8	8	23	80	40.1	48.4	18.3	M10	**NA 206**		1.43
NAFC 206-17	1-1/16														**NA 206-17**		1.48
NAFC 206-18	1-3/8	4-59/64	3-15/16	2-25/32	25/64	15/32	5/16	5/16	29/32	3.1496	1-37/64	1.906	0.720	3/8	**NA 206-18**	**FC206**	1.45
NAFC 206-19	1-3/16														**NA 206-19**		1.43
NAFC 206-20	1-1/4														**NA 206-20**		1.40
NAFC 207	35	135	110	77.8	11	14	8	9	26	90	43.3	51.1	18.8	M12	**NA 207**		1.93
NAFC 207-20	1-1/4														**NA 207-20**		2.00
NAFC 207-21	1-5/16	1-5/16	4-21/64	3-1/16	7/16	35/64	5/16	23/64	1-1/32	3.5433	1-45/64	2.012	0.740	7/16	**NA 207-21**	**FC207**	1.96
NAFC 207-22	1-3/8														**NA 207-22**		1.93
NAFC 207-23	1-7/16														**NA 208-23**		1.87
NAFC 208	40	145	120	84.8	11	14	10	9	26	100	45.9	56.3	21.4	M12	**NA 208**		2.29
NAFC 208-24	1-1/2														**NA 208-24**	**FC208**	2.34
NAFC 208-25	1-9/16	5-45/64	4-23/32	3-11/32	7/16	35/64	25/64	23/64	1-1/32	3.9370	1-13/16	2.217	0.843	7/16	**NA 208-25**		2.30
NAFC 209	45	160	132	93.3	10	16	12	14	26	105	44.9	56.3	21.4	M14	**NA 209**		2.85
NAFC 209-26	1-5/8														**NA 209-26**	**FC209**	2.96
NAFC 209-27	1-11/16	6-19/64	5-13/64	3-43/64	25/64	5/8	15/32	35/64	1-1/32	4.1339	1-49/64	2.217	0.843	1/2	**NA 209-27**		2.91
NAFC 209-28	1-3/4														**NA 209-28**		2.87
NAFC 210	50	165	138	97.6	10	16	12	14	28	110	48.1	62.7	24.6	M14	**NA 210**		3.09
NAFC 210-29	1-13/16														**NA 210-29**		3.24
NAFC 210-30	1-7/8	6-1/2	5-7/16	3-27/32	25/64	5/8	15/32	35/64	1-7/64	4.3307	1-57/64	2.469	0.969	1/2	**NA 210-30**	**FC210**	3.18
NAFC 210-31	1-15/16														**NA 210-31**		
NAFC 210-32	2														**NA 210-32**		3.06
NAFC 211	55	185	150	106.1	13	19	12	15	31	125	56.6	71.4	27.8	M16	**NA 211**		4.22
NAFC 211-32	2														**NA 211-32**		4.42
NAFC 211-33	2-1/16	7-9/32	5-29/32	4-3/16	33/64	3/4	15/32	19/32	1-7/32	4.9213	2-15/64	2.811	1.094	5/8	**NA 211-33**	**FC211**	4.34
NAFC 211-34	2-1/8														**NA 211-34**		4.27
NAFC 211-35	2-3/16														**NA 211-35**		4.19
NAFC 212	60	195	160	113.1	17	19	12	15	36	135	63.8	77.8	31	M16	**NA 212**		5.28
NAFC 212-36	2-1/4														**NA 212-36**		5.44
NAFC 212-37	2-5/6	7-11/16	6-19/64	4-29/64	43/64	3/4	15/32	19/32	1-27/64	5.3150	2-33/64	3.063	1.220	5/8	**NA 212-37**	**FC212**	5.35
NAFC 212-38	2-3/8														**NA 212-38**		5.30
NAFC 212-39	2-7/16														**NA 212-39**		5.17
NAFC 213	65	205	170	120.2	16	19	14	15	36	145	67.6	85.7	34.1	M16	**NA 213**		6.21
NAFC 213-40	2-1/2	8-5/64	6-11/16	4-47/64	5/8	3/4	35/64	19/32	1-27/64	5.5118	2-21/32	3.374	1.343	5/8	**NA 214-40**	**FC213**	6.31
NAFC 213-41	2-9/16														**NA 213-41**		6.20
NAFC 214	70	215	177	125.1	17	19	14	18	40	150	68.6	85.7	34.1	M16	**NA 214**		7.45
NAFC 214-42	2-3/8														**NA 214-42**	**FC214**	7.69
NAFC 214-43	2-11/16	8-15/32	6-31/32	4-59/64	43/64	3/4	35/64	23/32	1-37/64	5.9055	2-45/64	3.374	1.343	5/8	**NA 214-43**		7.58
NAFC 214-44	2-3/4														**NA 214-44**		7.46
NAFC 215	75	220	184	130.1	18	19	16	18	40	160	72.8	92.1	37.3	M16	**NA 215**		8.19
NAFC 215-45	2-13/16														**NA 215-45**		8.49
NAFC 215-46	2-7/8	8-21/32	7-1/4	5-1/8	23/32	3/4	5/8	23/32	1-37/64	6.2992	2-7/8	3.626	1.469	5/8	**NA 215-46**	**FC215**	8.36
NAFC 215-47	2-15/16														**NA 215-47**		8.23
NAFC 215-48	3														**NA 215-48**		8.09

FBJ®

Flange Units

UCFCX Series

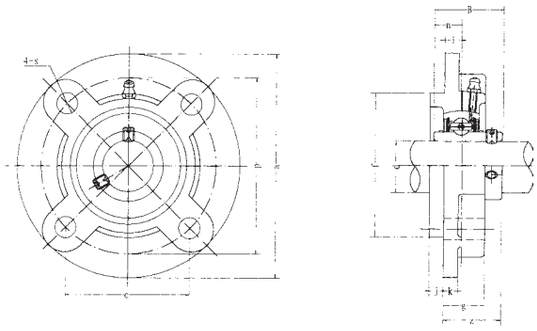

Unit No.	Dimensions mm / inch													Bolt Size mm / inch	Bearing No.	Housing No.	Weight (kg)
	d	a	p	e	i	s	j	k	g	f	z	B	n				
UCFC X05	25	111	92	65	10	9.5	6	9.5	24	76	32.2	38.1	15.9	M8	**UC X05**		1.2
UCFC X05-13	13/16														**UC X05-13**		
UCFC X05-14	7/8	4-3/8	3-5/8	2-9/16	25/64	3/8	15/64	3/8	15/16	2.9921	1-9/32	1.5000	0.626	5/16	**UC X05-14**	**FCX05**	
UCFC X05-15	15/16														**UC X05-15**		
UCFC X05-16	1														**UC X05-16**		
UCFC X06	30	127	105	74.2	8	12	9.5	9.5	22.5	85	33.4	42.9	17.5	M10	**UC X06**		1.5
UCFC X06-17	1-1/16														**UC X06-17**		
UCFC X06-18	1-1/8	5	4-9/64	2-59/64	5/16	15/32	3/8	3/8	7/8	3.3465	1-5/16	1.6890	0.689	3/8	**UC X06-18**	**FCX06**	
UCFC X06-19	1-3/16														**UC X06-19**		
UCFC X06-20	1-1/4														**UC X06-20**		
UCFC X07	35	133	111	78.5	9	12	11	11	26	92	39.2	49.2	19	M10	**UC X07**		1.9
UCFC X07-21	1-5/16														**UC X07-21**	**FCX07**	
UCFC X07-22	1-3/8	5-1/4	4-3/8	3-3/32	23/64	15/32	7/16	7/16	1-1/32	3.6220	1-17/32	1.9370	0.748	3/8	**UC X07-22**		
UCFC X07-23	1-7/16														**UC X07-23**		
UCFC X08	40	133	111	78.5	9	12	11	11	26	92	39.2	49.2	19	M10	**UC X08**		2.0
UCFC X08-24	1-1/2	5-1/4	4-3/8	3-3/32	23/64	15/32	7/16	7/16	1-1/32	3.6220	1-17/32	1.9370	0.748	3/8	**UC X08-24**	**FCX08**	
UCFC X08-25	1-9/16														**UC X08-25**		
UCFC X09	45	155	130	91.9	8	14	12	11	25	108	40.6	51.6	19	M12	**UC X09**		2.6
UCFC X09-26	1-5/8														**UC X09-26**		
UCFC X09-27	1-11/16	6-3/32	5-1/8	3-5/8	5/16	35/64	15/32	7/16	63/64	4.2520	1-19/32	2.0315	0.748	7/16	**UC X09-27**	**FCX09**	
UCFC X09-28	1-3/4														**UC X09-28**		
UCFC X09-29	1-13/16														**UC X09-29**		
UCFC X10	50	162	136	96.2	7	14	16	11	25	118	40.4	55.6	22.2	M12	**UC X10**		3.2
UCFC X10-30	1-7/8														**UC X10-30**	**FCX10**	
UCFC X10-31	1-15/16	6-3/8	5-23/64	3-25/32	9/32	35/64	5/8	7/16	63/64	4.6457	1-19/32	2.1890	0.874	7/16	**UC X10-31**		
UCFC X10-32	2														**UC X10-32**		
UCFC X11	55	180	152	107.5	4	16	22	13	26	127	43.7	65.1	25.4	M14	**UC X11**		4.3
UCFC X11-33	2-1/16														**UC X11-33**		
UCFC X11-34	2-1/8														**UC X11-34**	**FCX11**	
UCFC X11-35	2-3/16	7-3/32	5-63/64	4-15/64	5/32	5/8	55/64	1/2	1-1/32	5.0000	1-23/32	2.5630	1.000	1/2	**UC X11-35**		
UCFC X11-36	2-5/16														**UC X11-36**		
UCFC X11-37															**UC X11-37**		
UCFC X12	60	194	165	116.7	11	16	20	14	33	140	50.7	65.1	25.4	M14	**UC X12**		5.3
UCFC X12-38	2-3/8	7-5/8	6-1/2	4-19/32	7/16	5/8	25/32	9/16	1-5/16	5.5118	2	2.5630	1.000	1/2	**UC X12-38**	**FCX12**	
UCFC X12-39	2-7/16														**UC X12-39**		
UCFC X13	65	194	165	116.7	11	16	20	14	33	140	55.4	74.6	30.2	M14	**UC X13**		5.7
UCFC X13-40	2-1/2	7-5/8	6-1/2	4-19/32	7/16	5/8	25/32	9/16	1-5/16	5.5118	2-3/16	2.9370	1.189	1/2	**UC X13-40**	**FCX13**	
UCFC X13-41	2-9/16														**UC X13-41**		
UCFC X14	70	222	190	134.3	14	19	20	14	36	164	58.5	77.8	33.3	M16	**UC X14**		7.3
UCFC X14-42	2-5/8														**UC X14-42**	**FCX14**	
UCFC X14-43	2-1/16	8-3/4	7-31/64	5-9/32	35/64	3/4	25/32	9/16	1-13/32	6.4567	2-5/16	3.0630	1.311	5/8	**UC X14-43**		
UCFC X14-44	2-3/4														**UC X14-44**		
UCFC X15	75	222	190	134.3	12	19	22	16	35	164	61.3	82.6	33.3	M16	**UC X15**		8
UCFC X15-45	2-13/16														**UC X15-45**		
UCFC X15-46	2-7/8	8-3/4	7-31/64	5-9/32	15/32	3/4	55/64	5/8	1-3/8	6.4567	2-13/32	3.2520	1.311	5/8	**UC X15-46**	**FCX15**	
UCFC X15-47	2-15/16														**UC X15-47**		
UCFC X15-48	3														**UC X15-48**		
UCFC X16	80	260	219	154.8	10	23	25	19	36	186	61.6	85.7	34.1	M20	**UC X16**		11.3
UCFC X16-49	3-1/16														**UC X16-49**		
UCFC X16-50	3-1/8	10-1/4	8-5/8	6-3/32	25/64	29/32	63/64	3/4	1-13/32	7.3228	2-7/16	3.3740	1.343	3/4	**UC X16-50**	**FCX16**	
UCFC X16-51	3-3/16														**UC X16-51**		
UCFC X16-52	3-1/4														**UC X16-52**		
UCFC X17	85	260	219	154.8	10	23	25	19	36	186	66.3	96	39.7	M20	**UC X17**		12.9
UCFC X17-53	3-5/16	10-1/4	8-5/8	6-3/32	25/64	29/32	63/64	3/4	1-13/32	7.3228	2-5/8	3.7795	1.5630	3/4	**UC X17-53**	**FCX17**	
UCFC X17-55	3-7/16														**UC X17-55**		

UCFA 2 Series

Flange Units

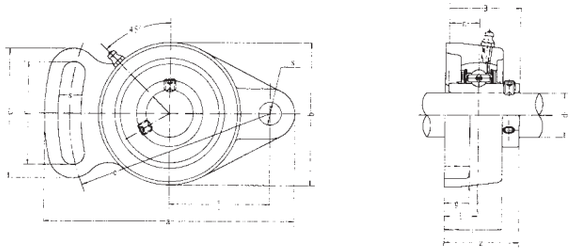

Unit No.	Dimensions mm inch													Bolt Size mm inch	Bearing No.	Housing No.	Weight (kg)
	d	a	e	i	g	l	S	b	z	f	c	B	n				
UCFA 201	12	98	78	15	12	25.5	10	60	33.3	40	50	31	12.7	M8	**UC 201**		0.50
UCFA 201-8	3/4														**UC 201-8**		0.49
UCFA 202	15														**UC 202**		0.49
UCFA 202-9	9/16														**UC 202-9**		0.49
UCFA 202-10	5/8	3-55/64	3-5/64	19/32	15/32	1	25/64	2-3/8	1-5/16	1-37/64	1-31/32	1.2205	0.500	5/16	**UC 202-10**	**FA204**	0.49
UCFA 203	17														**UC 203**		0.48
UCFA 203-11	11/16														**UC 203-11**		0.47
UCFA 204	20														**UC 204**		0.46
UCFA 204-12	3/4														**UC 204-12**		0.46
UCFA 205	25	124	98	16	14	27	13	70	35.8	51	65	34.1	14.3	M10	**UC 205**		0.66
UCFA 205-13	13/16														**UC 205-13**		0.70
UCFA 205-14	7/8	4-7/8	3-55/64	5/8	35/64	1-1/16	33/64	2-3/4	1-13/32	2-1/64	2-9/16	1.3425	0.563	3/8	**UC 205-14**	**FA205**	0.69
UCFA 205-15	15/16														**UC 205-15**		0.67
UCFA 205-16	1														**UC 205-16**		0.66
UCFA 206	30	141	115	18	14	31	13	83	40.2	58	72	38.1	15.9	M10	**UC 206**		0.93
UCFA 206-17	1-1/16														**UC 206-17**		0.96
UCFA 206-18	1-1/8	5-35/64	4-17/32	45/64	35/64	1-7/32	33/64	3-17/64	1-19/32	2-9/32	2-27/32	1.5000	0.626	3/8	**UC 206-18**	**FA206**	0.95
UCFA 206-19	1-3/16														**UC 206-19**		0.93
UCFA 206-20	1-1/4														**UC 206-20**		0.92
UCFA 207	35	155	128	19	16	34	15	96	44.4	66	82	42.9	17.5	M12	**UC 207**		1.46
UCFA 207-20	1-1/4														**UC 207-20**		1.52
UCFA 207-21	1-5/16	6-7/64	5-3/64	3/4	5/8	1-11/32	19/32	3-25/32	1-3/4	2-19/32	3-15/64	1.6890	0.689	7/16	**UC 207-21**	**FA207**	1.49
UCFA 207-22	1-3/8														**UC 207-22**		1.46
UCFA 207-23	1-7/16														**UC 207-23**		1.43
UCFA 208	40	171	142	21	16	38	15	105	51.2	71	87	49.2	19	M12	**UC 208**		1.78
UCFA 208-24	1-1/2	47/64	5-19/32	53/64	5/8	1-1/2	19/32	4-9/64	2-1/64	2-51/64	3-27/64	1.9370	0.748	7/16	**UC 208-24**	**FA208**	1.82
UCFA 208-25	1-9/16														**UC 208-25**		1.79
UCFA 209	45	179	146	22	18	40	17	111	52.2	72	90	49.2	19	M14	**UC 209**		2.03
UCFA 209-26	1-5/8														**UC 209-26**	**FA209**	2.13
UCFA 209-27	1-11/16	7-3/64	5-3/4	55/64	45/64	1-37/64	43/64	4-3/8	2-1/16	2-53/64	3-35/64	1.9370	0.748	1/2	**UC 209-27**		2.09
UCFA 209-28	1-3/4														**UC 209-28**		2.05
UCFA 210	50	189	155	22	18	40	17	116	54.6	76	94	51.6	19	M14	**UC 210**		2.23
UCFA 210-29	1-13/16														**UC 210-29**		2.35
UCFA 210-30	1-7/8	7-7/16	6-7/64	55/64	45/64	1-37/64	43/64	4-9/16	2-5/32	3	3-45/64	2.0315	0.748	1/2	**UC 210-30**	**FA210**	2.30
UCFA 210-31	1-15/16														**UC 210-31**		2.25
UCFA 210-32	2														**UC 210-32**		2.21
UCFA 211	55	216	182	25	20	44	17	133	58.4	86	104	55.6	22.2	M14	**UC 211**		3.41
UCFA 211-32	2														**UC 211-32**		3.56
UCFA 211-33	2-1/16	8-1/2	7-11/64	63/64	25/32	1-47/64	43/64	5-51/64	2-5/16	3-25/64	4-3/32	2.1890	0.874	1/2	**UC 211-33**	**FA211**	3.50
UCFA 211-34	2-1/8														**UC 211-34**		3.45
UCFA 211-35	2-3/16														**UC 211-35**		3.39
UCFA 212	60	240	202	29	20	48	19	140	68.7	100	118	65.1	25.4	M16	**UC 212**		4.29
UCFA 212-36	2-1/4														**UC 212-36**		4.42
UCFA 212-37	2-5/16	9-29/64	7-61/64	1-9/64	25/32	1-7/8	3/4	5-1/2	2-23/32	3-15/16	4-41/64	2.5630	1.000	5/8	**UC 212.37**	**FA212**	4.35
UCFA 212-38	2-3/8														**UC 212-38**		4.27
UCFA 212-39	2-7/16														**UC 212-39**		4.20
UCFA 213	65	250	210	30	20	50	19	155	69.7	102	122	65.1	25.4	M14	**UC 213**		5.21
UCFA 213-40	2-1/2	9-27/32	8-17/64	1-3/16	25/32	1-31/32	3/4	6-3/32	2-3/4	4-1/64	4-51/64	2.5630	1.000	5/8	**UC 213-40**	**FA213**	5.29
UCFA 213-41	2-9/16														**UC 213-41**		5.15

FBJ®

Flange Units

UCFB 2 Series

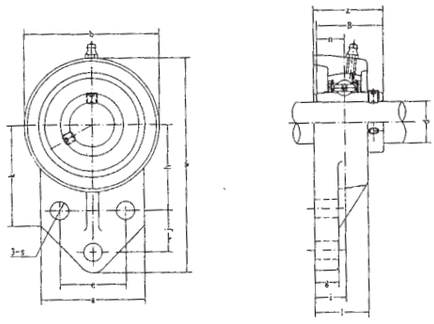

Unit No.	d	w	b	k	a	l	S	g	h	j	e	i	z	B	n	Bolt Size mm inch	Bearing No.	Housing No.	Weight (kg)
			Dimensions mm inch																
UCFB 201	12	110	62	52	52	25.5	10	13	42	27	32	15	33.3	31	12.7	M8	**UC 201**		0.58
UCFB 201-8	3/4																**UC 201-8**		0.57
UCFB 202	15																**UC 202**		0.57
UCFB 202-9	9/16																**UC 202-9**		0.57
UCFB 202-10	5/8	4-11/32	2-7/16	2-1/16	2-1/16	1	25/64	1/2	1-21/32	1-1/16	1-17/64	19/32	1-5/16	1.2205	0.500	5/16	**UC 202-10**	**FB204**	0.57
UCFB 203	17																**UC 203**		0.56
UCFB 203-11	11/16																**UC 203-11**		0.55
UCFB 204	20																**UC 204**		0.54
UCFB 204-12	3/4																**UC 204-12**		0.54
UCFB 205	25	116	68	52	56	27	10	13	45	27	34	16	35.8	34.1	14.3	M8	**UC 205**		0.79
UCFB 205-13	13/16																**UC 205-13**		0.83
UCFB 205-14	7/8	4-9/16	2-11/16	2-1/16	2-7/32	1-1/16	25/64	1/2	1-49/64	1-1/16	1-11/32	5/8	1-13/32	1.3425	0.563	5/16	**UC 205-14**	**FB205**	0.82
UCFB 205-15	15/16																**UC 205-15**		0.80
UCFB 205-16	1																**UC 205-16**		0.79
UCFB 206	30	130	78	55	65	31	10	13	50	29	40	18	40.2	38.1	15.9	M8	**UC 206**		0.95
UCFB 206-17	1-1/16																**UC 206-17**		0.98
UCFB 206-18	1-1/8	5-1/8	3-1/16	2-5/32	2-9/16	1-7/32	25/64	1/2	1-31/32	1-9/64	1-37/64	45/64	1-19/32	1.5000	0.626	5/16	**UC 206-18**	**FB206**	0.97
UCFB 206-19	1-3/16																**UC 206-19**		0.95
UCFB 206-20	1-1/4																**UC 206-20**		0.94
UCFB 207	35	144	90	62	70	34	10	15	55	32	46	19	44.4	42.9	17.5	M8	**UC 207**		1.29
UCFB 207-20	1-1/4																**UC 207-20**		1.35
UCFB 207-21	1-5/16	5-21/32	3-35/64	2-7/16	2-3/4	1-11/32	25/64	19/32	2-11/64	1-17/64	1-13/16	3/4	1-3/4	1.6890	0.689	5/16	**UC 207-21**	**FB207**	1.32
UCFB 207-22	1-3/8																**UC 207-22**		0.29
UCFB 207-23	1-7/16																**UC 207-23**		1.26
UCFB 208	40	164	100	72	78	36	12	16	60	41	50	21	51.2	49.2	19	M10	**UC 208**		1.78
UCFB 208-24	1-1/2	6-15/32	3-15/16	2-27/32	3-1/16	1-13/32	15/32	5/8	2-23/64	1-39/64	1-31/32	53/64	2-1/64	1.9370	0.748	3/8	**UC 208-24**	**FB208**	1.82
UCFB 208-25	1-9/16																**UC 208-25**		1.79
UCFB 209	45	174	106	76	80	38	12	18	65	43	54	22	52.2	49.2	19	M10	**UC 209**		1.91
UCFB 209-26	1-5/8																**UC 209-26**		2.01
UCFB 209-27	1-11/16	6-27/32	4-3/16	3	3-5/32	1-1/2	15/32	23/32	2-9/16	1-11/16	2-1/8	55/64	2-1/16	1.9370	0.748	3/8	**UC 209-27**	**FB209**	1.97
UCFB 209-28	1-3/4																**UC 209-28**		1.93
UCFB 210	50	184	112	82	86	40	12	18	68	46	58	22	54.6	51.6	19	M10	**UC 210**		2.36
UCFB 210-29	1-13/16																**UC 210-29**		2.48
UCFB 210-30	1-7/8	7-1/4	4-13/32	3-7/32	3-3/8	1-37/64	15/32	23/32	2-43/64	1-13/16	2-9/32	55/64	2-5/32	2.0315	0.748	3/8	**UC 210-30**	**FB210**	2.43
UCFB 210-31	1-15/16																**UC 210-31**		2.38
UCFB 210-32	2																**UC 210-32**		2.34
UCFB 211	55	207	130	86	90	43	14	18	78	50	62	25	58.4	55.6	22.2	M12	**UC 211**		3.15
UCFB 211-32	2																**UC 211-32**		3.31
UCFB 211-33	2-1/16																**UC 211-33**	**FB211**	3.25
UCFB 211-34	2-1/8	8-5/32	5-1/8	3-25/64	3-25/64	1-11/16	35/64	45/64	3-5/64	1-31/32	2-7/16	63/64	2-5/16	2.1890	0.874	7/16	**UC 211-34**		3.20
UCFB 211-35	2-3/16																**UC 211-35**		3.14
UCFB 212	60	223	140	90	94	48	14	18	84	55	66	29	68.7	65.1	25.4	M12	**UC 212**		3.99
UCFB 212-36	2-1/4																**UC 212-36**		4.12
UCFB 212-37	2-5/16	8-25/32	5-1/2	3-35/64	3-45/64	1-7/8	35/64	45/64	3-5/16	2-11/64	2-19/32	1-9/64	2-23/32	2.5630	1.000	7/16	**UC 212-37**	**FB212**	4.04
UCFB 212-38	2-3/8																**UC 212-38**		3.97
UCFB 212-39	2-7/16																**UC 212-39**		3.90
UCFB 213	65	244	155	94	100	50	14	20	92	60	70	30	69.7	65.1	25.4	M12	**UC 213**		5.15
UCFB 213-40	2-1/2	9-39/64	6-7/64	3-45/64	3-15/16	1-31/32	35/64	25/32	3-5/8	2-23/64	2-3/4	1-3/16	2-3/4	2.5630	1.000	7/16	**UC 213-40**	**FB213**	5.32
UCFB 214-41	2-9/16																**UC 213-41**		5.02

UCHA 2 Series

Screw Conveyor Hanger Units

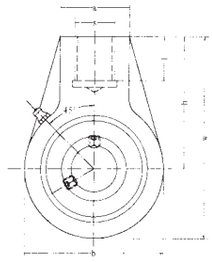

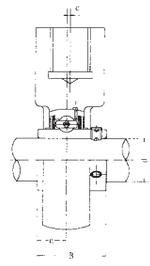

Unit No.	Dimensions mm / inch										Bearing No.	Housing No.	Weight (kg)
	d	h	w	b	c	a	S	l	B	n			
UCHA 201	12	64	96	64	0	40		19	31	12.7	**UC 201**		0.73
UCHA 201-8	3/4										**UC 201-8**		0.72
UCHA 202	15										**UC 202**		0.72
UCHA 202-9	9/16										**UC 202-9**		0.72
UCHA 202-10	5/8	2-33/64	3-25/32	2-33/64	0	1-37/64	G-3/4	3/4	1.2205	0.500	**UC 202-10**	**HA204**	0.72
UCHA 203	17										**UC 203**		0.71
UCHA 203-11	11/16										**UC 203-11**		0.70
UCHA 204	20										**UC 204**		0.69
UCHA 204-12	3/4										**UC 204-12**		0.69
UCHA 205	25	64	103	78	0	40		19	34.1	14.3	**UC 205**		0.83
UCHA 205-13	13/16										**UC 205-13**		0.87
UCHA 205-14	7/8	2-33/64	4-1/16	3-5/64	0	1-37/64	G-3/4	3/4	1.3425	0.563	**UC 205-14**	**HA205**	0.86
UCHA 205-15	15/16										**UC 205-15**		0.84
UCHA 205-16	1										**UC 205-16**		0.83
UCHA 206	30	64	103	78	0	40		19	38.1	15.9	**UC 206**		0.83
UCHA 206-17	1-1/16										**UC 206-17**		0.86
UCHA 206-18	1-1/8	2-33/64	4-1/16	3-5/64	0	1-37/64	G-3/4	3/4	1.5000	0.626	**UC 206-18**	**HA206**	0.85
UCHA 206-19	1-3/16										**UC 206-19**		0.83
UCHA 206-20	1-1/4										**UC 206-20**		0.82
UCHA 207	35	70	116	92	0	40		19	42.9	17.5	**UC 207**		1.16
UCHA 206-20	1-1/4										**UC 207-20**		1.22
UCHA 207-21	1-5/16	2-3/4	4-9/16	3-5/8	0	1-37/64	G-3/4	3/4	1.6890	0.689	**UC 207-21**	**HA207**	1.19
UCHA 207-22	1-3/8										**UC 207-22**		1.16
UCHA 207-23	1-7/16										**UC 207-23**		1.13
UCHA 208	40	73	121	96	2	40		19	49.2	19	**UC 208**		1.32
UCHA 208-24	1-1/2	2-7/8	4-49/64	3-25/32	5/64	1-37/64	G-3/4	3/4	1.9370	0.748	**UC 208-24**	**HA208**	1.36
UCHA 208-25	1-9/16										**UC 208-25**		1.33
UCHA 209	45	82	136	108	5	48		21	49.2	19	**UC 209**		1.92
UCHA 209-26	1-5/8										**UC 209-26**	**HA209**	2.02
UCHA 209-27	1-11/64	3-15/64	5-23/64	4-1/4	13/64	1-57/64	G-1	53/64	1.9370	0.748	**UC 209-27**		1.98
UCHA 209-28	1-3/4										**UC 209-28**		1.94
UCHA 210	50	83	142	118	5	48		21	51.6	19	**UC 210**		1.90
UCHA 210-29	1-13/16										**UC 210-29**		2.02
UCHA 210-30	1-7/8	3-17/64	5-19/32	4-41/64	13/64	1-57/64	G1	53/64	2.0315	0.748	**UC 210-30**	**HA210**	1.97
UCHA 210-31	1-15/16										**UC 210-31**		1.92
UCHA 210-32	2										**UC 210-32**		1.88
UCHA 211	55	87	150	126	7	60		25	55.6	22.2	**UC 211**		2.61
UCHA 211-32	2										**UC 211-32**		2.76
UCHA 211-33	2-1/16	3-27/64	5-29/32	4-61/64	9/32	2-23/64	G1-1/4	63/64	2.1890	0.874	**UC 211-33**	**HA211**	2.70
UCHA 211-34	2-1/18										**UC 211-34**		2.65
UCHA 211-35	2-3/16										**UC 211-35**		2.59
UCHA 212	60	102	173	142	9	60		28	65.1	25.4	**UC 212**		3.54
UCHA 212-36	2-1/4										**UC 212-36**		3.67
UCHA 212-37	2-5/16										**UC 212-37**	**HA212**	3.59
UCHA 212-38	2-3/8	4-1/64	6-13/16	5-19/32	23/64	2-23/64	G1-1/4	1-7/64	2.5630	1.000	**UC 212-38**		3.52
UCHA 212-39	2-7/16										**UC 212-39**		3.45
UCHA 213	65	117	200	166	9.5	70		32	65.1	25.4	**UC 213**		5.80
UCHA 213-40	2-1/2	4-39/64	7-7/8	6-17/32	3/8	2-3/4	G1-1/2	1-17/64	2.5630	1.000	**UC 213-40**	**HA213**	5.89
UCHA 213-41	2-9/16										**UC 213-41**		5.80

FBJ®

Cartridge Units

UCC 2 Series

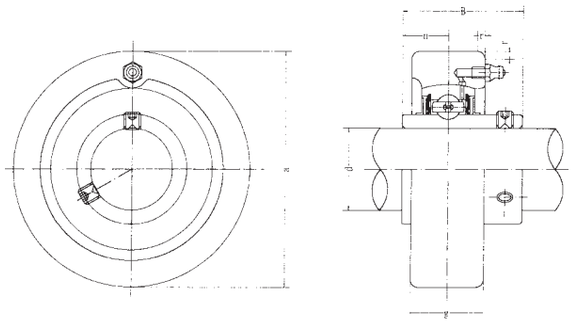

Bearing Unit / Insert

Unit No.	Dimensions mm / inch						Bearing No.	Housing No.	Weight (kg)
	d	a	g	r	B	n			
UCC 201	12	72	20	2	31	12.7	**UC 201**	**C204**	0.52
UCC 201-8	3/4	2.8346	25/32	0.079	1.2205	0.500	**UC 201-8**		0.51
UCC 202	15	72	20	2	31	12.7	**UC 202**		0.51
UCC 202-9	9/16	2.8346	25/32	0.079	1.2205	0.500	**UC 202-9**	**C204**	0.51
UCC 202-10	5/8						**UC 202-10**		0.51
UCC 203	17	72	20	2	31	12.7	**UC 203**	**C204**	0.50
UCC 203-11	11/16	2.8346	25/32	0.079	1.2205	0.500	**UC 203-11**		0.49
UCC 204	20	72	20	2	31	12.7	**UC 204**	**C204**	0.48
UCC 204-12	3/4	2.8346	25/32	0.079	1.2205	0.500	**UC 204-12**		0.48
UCC 205	25	80	22	2	34.1	14.3	**UC 205**	**C205**	0.63
UCC 205-13	13/16						**UC 205-13**		0.67
UCC 205-14	7/8	3.1496	55/64	0.079	1.3425	0.563	**UC 205-14**		0.66
UCC 205-15	15/16						**UC 205-15**		0.64
UCC 205-16	1						**UC 205-16**		0.63
UCC 206	30	85	27	2	38.1	15.9	**UC 206**		0.80
UCC 206-17	1-1/16						**UC 206-17**		0.83
UCC 206-18	1-1/8	3.3465	1-1/16	0.079	1.5000	0.626	**UC 206-18**	**C206**	0.82
UCC 206-19	1-3/16						**UC 206-19**		0.80
UCC 206-20	1-1/4						**UC 206-20**		0.79
UCC 207	35	90	28	2	42.9	17.5	**UC 207**		0.93
UCC 207-20	1-1/4						**UC 207-20**		0.99
UCC 207-21	1-5/16	3.5433	1-7/64	0.079	1.6890	0.689	**UC 207-21**	**C207**	0.96
UCC 207-22	1-3/8						**UC 207-22**		0.93
UCC 207-23	1-7/16						**UC 207-23**		0.90
UCC 208	40	100	30	2.5	49.2	19	**UC 208**		1.22
UCC 208-24	1-1/2	3.9370	1-3/16	0.098	1.9370	0.748	**UC 208-24**	**C208**	1.26
UCC 208-25	1-9/16						**UC 208-25**		1.23
UCC 209	45	110	31	2.5	49.2	19	**UC 209**		1.49
UCC 209-26	1-5/8						**UC 209-26**	**C209**	1.59
UCC 209-27	1-11/16	4.3307	1-7/32	0.098	1.9370	0.748	**UC 209-27**		1.55
UCC 209-28	1-3/4						**UC 209-28**		1.51
UCC 210	50	120	33	2.5	51.6	19	**UC 210**		1.90
UCC 210-29	1-13/16						**UC 210-29**		2.02
UCC 210-30	1-7/8	4.7244	1-19/64	0.098	2.0315	0.748	**UC 210-30**	**C210**	1.97
UCC 210-31	1-15/16						**UC 210-31**		1.92
UCC 210-32	2						**UC 210-32**		1.88
UCC 211	55	125	35	2.5	55.6	22.2	**UC 211**		2.18
UCC 211-32	2						**UC 211-32**		2.33
UCC 211-33	2-1/16	4.9213	1-3/8	0.098	2.1890	0.874	**UC 211-33**	**C211**	2.27
UCC 211-34	2-1/8						**UC 211-34**		2.22
UCC 211-35	2-3/16						**UC 211-35**		2.16
UCC 212	60	130	38	2.5	65.1	25.4	**UC 212**		2.52
UCC 212-36	2						**UC 212-36**		2.65
UCC 212-37	2-1/16	5.1181	1-1/2	0.098	2.5630	1.000	**UC 212-37**	**C212**	2.57
UCC 212-38	2-1/8						**UC 212-38**		2.50
UCC 212-39	2-3/16						**UC 212-39**		2.43
UCC 213	65	140	40	3	65.1	25.4	**UC 213**		2.98
UCC 213-40	2-1/2	5.5118	1-37/64	0.118	2.5630	1.000	**UC 213-40**	**C213**	3.07
UCC 213-41	2-9/16						**UC 213-41**		2.98

UKC 2 Series

Cartridge Units
(Adapter mounted)

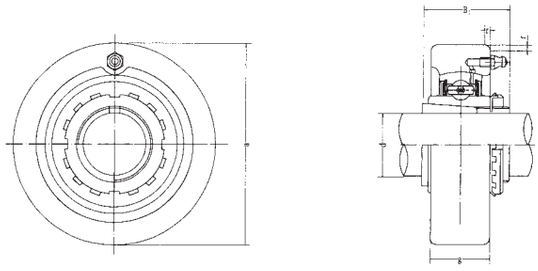

Unit No.	Dimensions mm / inch					Bearing No.	Housing No.	No.	Weight (kg)
	d	a	g	r	B_1				
UKC 205	20 3/4	80 3.1496	22 55/64	2 0.079	35 1.378	**UK 205**	C205	**H305** **HE305**	0.68
UKC 206	25 7/8 1	85 3.3465	27 1-1/16	2 0.079	38 1.496	**UK 206**	C206	**H306** **HS306** **HE306**	0.84
UKC 207	30 1-1/8	90 3.5433	28 1-7/64	2 0.079	43 1.693	**UK 207**	C207	**H307** **HS307**	1.02
UKC 208	35 1-1/4 1-3/8	100 3.9370	30 1-3/16	2.5 0.098	46 1.811	**UK 208**	C208	**H308** **HE308** **HS308**	1.32
UKC 209	40 1-7/16 1-1/2 1-5/8	110 4.3307	31 1-7/32	2.5 0.098	50 1.969	**UK 209**	C209	**H309** **HA309** **HE309** **HS309**	1.64
UKC 210	45 1-5/8 1-11/16 1-3/4	120 4.7244	33 1-19/64	2.5 0.098	55 2.165	**UK 210**	C210	**H310** **HS310** **HA310** **HE310**	2.07
UKC 211	50 1-7/8 1-15/16 2	125 4.9213	35 1-3/8	2.5 0.098	59 2.323	**UK 211**	C211	**H311** **HS311** **HA311** **HE311**	2.33
UKC 212	55 2-1/8	130 5.1181	38 1-1/2	2.5 0.098	62 2.441	**UK 212**	C212	**H312** **HS312**	2.57
UKC 213	60 2-3/16 2-1/4 2-3/8	140 5.5118	40 1-37/64	3 0.118	65 2.559	**UK 213**	C213	**H313** **HA313** **HE313** **HS313**	2.89

FBJ®

Cartridge Units

NAC 2 Series

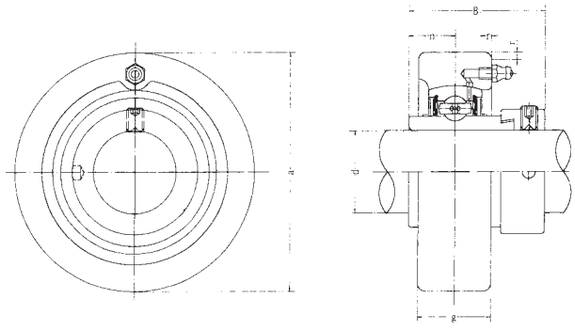

Unit No.	Dimensions mm / inch						Bearing No.	Housing No.	Weight (kg)
	d	a	g	r	B	n			
NAC 204	20	72	20	2	43.7	17.1	**NA 204**	**C204**	0.55
NAC 204-12	3/4	2.8346	25/32	0.079	1.720	0.673	**NA 204-12**		0.55
NAC 205	25	80	22	2	44.4	17.5	**NA 205**		0.70
NAC 205-13	13/16						**NA 205-13**		0.75
NAC 205-14	7/8	3.1496	55/64	0.079	1.748	0.689	**NA 205-14**	**C205**	0.74
NAC 205-15	15/16						**NA 205-15**		0.72
NAC 205-16	1						**NA 205-16**		0.70
NAC 206	30	85	27	2	48.4	18.3	**NA 206**		0.93
NAC 206-17	1-1/16						**NA 206-17**		0.98
NAC 205-18	1-1/8	3.3465	1-1/16	0.079	1.906	0.720	**NA 206-18**	**C206**	0.95
NAC 206-19	1-3/16						**NA 206-19**		0.93
NAC 206-20	1-1/4						**NA 206-20**		0.90
NAC 207	35	90	28	2	51.1	18.8	**NA 207**		1.05
NAC 207-20	1-1/4						**NA 207-20**		1.12
NAC 207-21	1-5/16	3.5433	1-7/64	0.079	2.012	0.740	**NA 207-21**	**C207**	1.08
NAC 207-22	1-3/8						**NA 207-22**		1.05
NAC 207-23	1-7/16						**NA 207-23**		1.02
NAC 208	40	100	30	2.5	56.3	21.4	**NA 208**		1.37
NAC 208-24	1-1/2	3.9370	1-3/16	0.098	2.217	0.843	**NA 208-24**	**C208**	1.42
NAC 208-25	1-9/16						**NA 208-25**		1.38
NAC 209	45	110	31	2.5	56.3	21.4	**NA 209**		1.66
NAC 209-26	1-5/8						**NA 209-26**	**C209**	1.77
NAC 209-27	1-11/16	4.3307	1-7/32	0.098	2.217	0.843	**NA 209-27**		1.72
NAC 209-28	1-3/4						**NA 209-28**		1.68
NAC 210	50	120	33	2.5	62.7	24.6	**NA 210**		2.09
NAC 210-29	1-13/16						**NA 210-29**		2.24
NAC 210-30	1-7/8	4.7244	1-19/64	0.098	2.469	0.969	**NA 210-30**	**C210**	2.18
NAC 210-31	1-15/16						**NA 210-31**		2.12
NAC 210-32	2						**NA 210-32**		2.06
NAC 211	55	125	35	2.5	71.4	27.8	**NA 211**		2.39
NAC 211-32	2						**NA 211-32**		2.59
NAC 211-33	2-1/16	4.9213	1-3/8	0.098	2.811	1.094	**NA 211-33**	**C211**	2.51
NAC 211-34	2-1/8						**NA 211-34**		2.44
NAC 211-35	2-3/16						**NA 211-35**		2.36
NAC 212	60	130	38	2.5	77.8	31	**NA 212**		2.86
NAC 212-36	2-1/4						**NA 212-36**		3.02
NAC 212-37	2-5/16	5.1181	1-1/2	0.098	3.063	1.220	**NA 212-37**	**C212**	2.93
NAC 212-38	2-3/8						**NA 212-38**		2.88
NAC 212-39	2-7/16						**NA 212-39**		2.75

UCCX Series

Cartridge Units

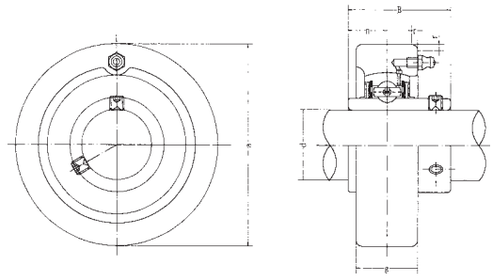

Unit No.	Dimensions mm / inch						Bearing No.	Housing No.	Weight (kg)
	d	a	g	r	B	n			
UCC X05	25	90	27	2	38.1	15.9	**UC X05**		
UCC X05-13	13/16						**UC X05-13**		
UCC X05-14	7/8	3.5433	1-1/16	0.079	1.5000	0.626	**UC X05-14**	**CX05**	1.1
UCC X05-15	15/16						**UC X05-15**		
UCC X05-16	1						**UC X05-16**		
UCC X06	30	100	30	2.5	42.9	17.5	**UC X06**		
UCC X06-17	1-1/16						**UC X06-17**		
UCC X06-18	1-1/8	3.9370	1-3/16	0.098	1.6890	0.689	**UC X06-18**	**CX06**	1.6
UCC X06-19	1-3/16						**UC X06-19**		
UCC X06-20	1-1/4						**UC X06-20**		
UCC X07	35	110	34	2.5	49.2	19	**UC X07**		
UCC X07-21	1-5/16						**UC X07-21**	**CX07**	2.0
UCC X07-22	1-3/8	4.3307	1-11/32	0.098	1.9370	0.748	**UC X07-22**		
UCC X07-23	1-7/16						**UC X07-23**		
UCC X08	40	120	38	2.5	49.2	19	**UC X08**		
UCC X08-24	1-1/2	4.7244	1-1/2	0.098	1.9370	0.748	**UC X08-24**	**CX08**	2.5
UCC X08-25	1-9/16						**UC X08-25**		
UCC X09	45	120	38	2.5	51.6	19	**UC X09**		
UCC X09-26	1-5/8						**UC X09-26**		
UCC X09-27	1-11/16	4.7244	1-1/2	0.098	2.0315	0.748	**UC X09-27**	**CX09**	2.4
UCC X09-28	1-3/4						**UC X09-28**		
UCC X09-29	1-13/16						**UC X09-29**		
UCC X10	50	130	40	2.5	55.6	22.2	**UC X10**		
UCC X10-30	1-7/8						**UC X10-30**	**CX10**	3.0
UCC X10-31	1-15/16	5.1181	1-37/64	0.098	2.1890	0.874	**UC X10-31**		
UCC X10-32	2						**UC X10-32**		
UCC X11	55	150	42	3	65.1	25.4	**UC X11**		
UCC X11-33	2-1/16						**UC X11-33**		
UCC X11-34	2-1/8	5.9055	1-21/32	0.118	2.5630	1.000	**UC X11-34**	**CX11**	4.4
UCC X11-35	2-3/16						**UC X11-35**		
UCC X11-36	2-1/4						**UC X11-36**		
UCC X11-37	2-5/16						**UC X11-37**		
UCC X12	60	160	44	3	65.1	25.4	**UC X12**		
UCC X12-38	2-3/8	6.2992	1-47/64	0.118	2.5630	1.000	**UC X12-38**	**CX12**	5.0
UCC X12-39	2-7/16						**UC X12-39**		

FBJ®

Take-up Units

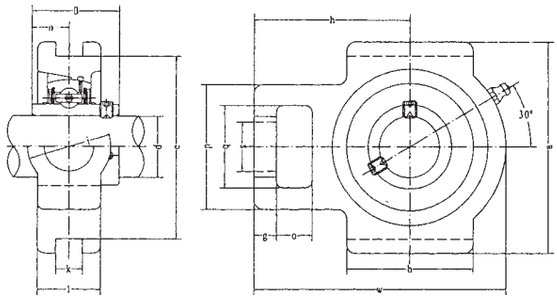

UCT 2 Series

Unit No.	Dimensions mm / inch																Bearing No.	Housing No.	Weight (kg)
	d	O	g	p	q	S	b	k	e	a	w	j	l	h	B	n			
UCT 201	12	16	10	51	32	19	51	12	76	89	94	32	21	61	31	12.7	**UC 201**	**T204**	0.80
UCT 201-8	3/4	5/8	25/64	1-1/64	1-1/4	3/4	2-1/64	15/32	2-63/64	3-1/2	3-11/16	1-1/4	13/16	2-13/32	1.2205	0.500	**UC 201-8**		0.79
UCT 202	15	16	10	51	32	19	51	12	76	89	94	32	21	61	31	12.7	**UC 202**		0.79
UCT 202-9	9/16	5/8	25/64	1-1/64	1-1/4	3/4	2-1/64	15/32	2-63/64	3-1/2	3-11/16	1-1/4	13/16	2-13/32	1.2205	0.500	**UC 202-9**	**T204**	0.79
UCT 202-10	5/8																**UC 202-10**		0.79
UCT 203	17	16	10	51	32	19	51	12	76	89	94	32	21	61	31	12.7	**UC 203**	**T204**	0.78
UCT 203-11	11/16	5/8	25/64	1-1/64	1-1/4	3/4	2-1/64	15/32	2-63/64	3-1/2	3-11/16	1-1/4	13/16	2-13/32	1.2205	0.500	**UC 203-11**		0.77
UCT 204	20	16	10	51	32	19	51	12	76	89	94	32	21	61	31	12.7	**UC 204**	**T204**	0.76
UCT 204-12	3/4	5/8	25/64	1-1/64	1-1/4	3/4	2-1/64	15/32	2-63/64	3-1/2	3-11/16	1-1/4	13/16	2-13/32	1.2205	0.500	**UC 204-12**		0.76
UCT 205	25	16	10	51	32	19	51	12	76	89	97	32	24	62	34.1	14.3	**UC 205**		0.81
UCT 205-13	13/16																**UC 205-13**		0.85
UCT 205-14	7/8	5/8	25/64	1-1/64	1-1/4	3/4	2-1/64	15/32	2-63/64	3-1/2	3-13/16	1-1/4	15/16	2-7/16	1.3425	0.563	**UC 205-14**	**T205**	0.84
UCT 205-15	15/16																**UC 205-15**		0.82
UCT 205-16	1																**UC 205-16**		0.81
UCT 206	30	16	10	56	37	22	57	12	89	102	113	37	28	70	38.1	15.9	**UC 206**		1.22
UCT 206-17	1-1/16																**UC 206-17**		1.23
UCT 206-18	1-1/8																**UC 206-18**	**T206**	1.24
UCT 206-19	1-3/16	5/8	25/64	2-7/32	1-29/64	55/64	2-1/4	15/32	3-1/2	4-1/64	4-29/64	1-29/64	1-3/32	2-3/4	1.5000	0.626	**UC 206-19**		1.22
UCT 206-20	1-1/4																**UC 206-20**		1.21
UCT 207	35	16	13	64	37	22	64	12	89	102	129	37	30	78	42.9	17.5	**UC 207**		1.44
UCT 207-20	1-1/4																**UC 207-20**		1.50
UCT 207-21	1-5/16	5/8	33/64	2-33/64	1-29/64	55/64	2-33/64	15/32	3-1/2	4-1/64	5-5/64	1-29/64	1-3/16	3-5/64	1.6890	0.689	**UC 207-21**	**T207**	1.46
UCT 207-22	1-3/8																**UC 207-22**		1.44
UCT 207-23	1-7/16																**UC 207-23**		1.41
UCT 208	40	19	16	83	49	29	83	16	102	114	144	49	33	89	49.2	19	**UC 208**		2.40
UCT 208-24	1-1/2	3/4	5/8	3-17/64	1-15/16	1-9/64	3-17/64	5/8	4-1/64	4-31/64	5-43/64	1-15/16	1-5/16	3-1/2	1.9370	0.748	**UC 208-24**	**T208**	2.44
UCT 208-25	1-9/16																**UC 208-25**		2.41
UCT 209	45	19	16	83	49	29	83	16	102	117	144	49	35	87	49.2	19	**UC 209**		2.36
UCT 209-26	1-5/8																**UC 209-26**	**T209**	2.46
UCT 209-27	1-11/16	3/4	5/8	3-17/64	1-15/16	1-9/64	3-17/64	5/8	4-1/64	4-39/64	5-43/64	1-15/16	1-3/8	3-27/64	1.9370	0.748	**UC 209-27**		2.42
UCT 209-28	1-3/4																**UC 209-28**		2.38
UCT 210	50	19	16	83	49	29	86	16	102	117	149	49	37	90	51.6	19	**UC 210**		2.43
UCT 210-29	1-13/16																**UC 210-29**		2.55
UCT 210-30	1-7/8	3/4	5/8	3-17/64	1-15/16	1-9/64	3-17/64	5/8	4-1/64	4-39/64	5-55/64	1-15/16	1-15/32	3-35/64	2.0315	0.748	**UC 210-30**	**T210**	2.50
UCT 210-31	1-15/16																**UC 210-31**		2.45
UCT 210-32	2																**UC 210-32**		2.41
UCT 211	55	25	19	102	64	35	95	22	130	146	171	64	38	106	55.6	22.2	**UC 211**		4.11
UCT 211-32	2																**UC 211-32**		4.26
UCT 211-33	2-1/16																**UC 211-33**	**T211**	4.20
UCT 211-34	2-1/8	63/64	3/4	4-1/64	2-1/32	1-3/8	3-3/4	55/64	5-1/8	5-3/4	6-47/64	2-33/64	1-1/2	4-11/64	2.1890	0.874	**UC 211-34**		4.15
UCT 211-35	2-3/16																**UC 211-35**		4.09
UCT 212	60	32	19	102	64	35	102	22	130	146	194	64	42	119	65.1	25.4	**UC 212**		4.97
UCT 212-36	2-1/4																**UC 212-36**		5.10
UCT 212-37	2-5/16	1-17/64	3/4	4-1/64	2-1/32	1-3/8	4-1/64	55/64	5-1/8	5-3/4	7-41/64	2-33/64	1-21/32	4-11/16	2.5630	1.000	**UC 212-37**	**T212**	5.02
UCT 212-38	2-3/8																**UC 212-38**		4.95
UCT 212-39	2-7/16																**UC 212-39**		4.88
UCT 213	65	32	21	111	70	41	121	26	151	167	224	70	44	137	65.1	25.4	**UC 213**		6.65
UCT 213-40	2-1/2																**UC 213-40**	**T213**	6.74
UCT 213-41	2-9/16	1-17/64	53/64	4-3/8	2-3/4	1-39/64	4-49/64	1-1/32	5-15/16	6-37/64	8-13/16	2-3/4	1-23/32	5-25/64	2.5630	1.000	**UC 213-41**		6.65
UCT 214	70	32	21	111	70	41	121	26	151	167	224	70	46	137	74.6	30.2	**UC 214**		7.05
UCT 214-42	2-5/8																**UC 214-42**	**T214**	7.26
UCT 214-43	2-11/16	1-17/64	53/64	4-3/8	2-3/4	1-39/64	4-49/64	1-1/32	5-15/16	6-37/64	8-13/16	2-3/4	1-13/16	5-25/64	2.9370	1.189	**UC 214-43**		7.16
UCT 214-44	2-3/4																**UC 214-44**		7.06
UCT 215	75	32	21	111	70	41	121	26	151	167	232	70	48	140	77.8	33.3	**UC 215**		7.41
UCT 215-45	2-13/16																**UC 215-45**		7.66
UCT 215-46	2-7/8																**UC 215-46**	**T215**	7.55
UCT 215-47	2-15/16	1-17/64	53/64	4-3/8	2-3/4	1-36/64	4-49/64	1-1/32	5-15/16	6-37/64	9-9/64	2-3/4	1-57/64	5-33/64	3.0630	1.311	**UC 215-47**		7.44
UCT 215-48	3																**UC 215-48**		7.32
UCT 216	80	32	21	111	70	41	121	26	165	184	235	70	51	140	82.6	33.3	**UC 216**		8.30
UCT 216-49	3-1/16	1-17/64	53/64	4-3/8	2-3/4	1-39/64	4-49/64	1-1/32	6-1/2	7-1/4	9-1/4	2-3/4	2	5-33/64	3.2520	1.311	**UC 216-49**	**T216**	8.48
UCT 216-50	3-1/8																**UC 216-50**		8.35
UCT 216-51	3-3/16																**UC 216-51**		8.22
UCT 217	85	38	29	124	73	48	157	30	173	198	260	73	54	162	85.7	34.1	**UC 217**		11.00
UCT 217-52	3-1/4																**UC 217-52**	**T217**	11.22
UCT 217-53	3-5/16	1-1/2	1-9/64	4-7/8	2-7/8	1-57/64	6-3/16	1-3/16	6-13/16	7-51/64	10-15/64	2-7/8	2-1/8	6-3/8	3.3740	1.343	**UC 217-53**		11.09
UCT 217-55	3-7/16																**UC 217-55**		10.80

UKT 2 Series

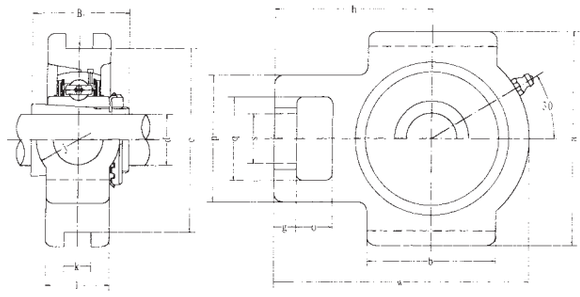

Take-up Units
(Adapter mounted)

Unit No.	Dimensions mm / inch															Bearing No.	Housing No.	No.	Weight (kg)
	d	o	g	p	q	s	b	k	e	a	w	j	l	h	B				
UKT 205	20 3/4	16 5/8	10 25/64	51 1-1/64	32 1-1/4	19 3/4	51 2-1/64	12 15/32	76 2-63/64	89 3-1/2	97 3-13/16	32 1-1/4	24 15/16	62 2-7/16	35 1.378	**UK 205**	**T 205**	**H305** **HE305**	0.86
UKT 206	25 7/8 1	16 5/8	10 25/64	56 2-7/32	37 1-15/32	22 55/64	57 2-1/4	12 15/32	89 3-1/2	102 4-1/64	113 4-29/64	37 1-29/64	28 1-3/32	70 2-3/4	38 1.496	**UK 206**	**T206**	**H306** **HS306** **HE306**	1.26
UKT 207	30 1-1/8	16 5/8	13 33/64	64 2-33/64	37 1-15/32	22 55/64	64 2-33/64	12 15/32	89 3-1/2	102 4-1/64	129 5-5/64	37 1-29/64	30 1-3/16	78 3-5/64	43 1.693	**UK 207**	**T207**	**H307** **HS307**	2.50
UKT 208	35 1-1/4 1-3/8	19 3/4	16 5/8	83 3-17/64	49 1-15/16	29 1-9/64	83 3-17/64	16 5/8	102 4-1/64	114 4-31/64	144 5-43/64	49 1-15/16	33 1-5/16	89 3-1/2	46 1.811	**UK 208**	**T208**	**H308** **HE308** **HE308**	2.50
UKT 209	40 1-7/16 1-1/2 1-5/8	19 3/4	16 5/8	83 3-17/64	49 1-15/16	29 1-9/64	83 3-17/64	16 5/8	102 4-1/64	117 4-39/64	144 5-43/64	49 1-15/16	35 1-3/8	87 3-27/64	50 1.969	**UK 209**	**T209**	**H309** **HA309** **HE309** **HS309**	2.51
UKT 210	45 1-5/8 1-11/16 1-3/4	19 3/4	16 5/8	83 3-17/64	49 1-15/16	29 1-9/64	86 3-25/64	16 5/8	102 4-1/64	117 4-39/64	149 5-55/64	49 1-15/16	37 1-15/32	90 3-35/64	55 2.165	**UK 210**	**T210**	**H310** **HS310** **HA310** **HE310**	2.60
UKT 211	50 1-7/8 1-15/16 2	25 63/64	19 3/4	102 4-1/64	64 2-1/32	35 1-3/8	95 3-3/4	22 55/64	130 5-1/8	146 5-3/4	171 6-47/64	64 2-33/64	38 1-1/2	106 4-11/64	59 2.323	**UK 211**	**T211**	**H311** **HS311** **HA311** **HE311**	4.26
UKT 212	55 2-1/8	32 1-17/64	19 3/4	102 4-1/64	64 2-1/32	35 1-3/8	102 4-1/64	22 55/64	130 5-1/8	146 5-3/4	194 7-41/64	64 2-33/64	42 1-21/32	119 4-11/16	62 2.441	**UK 212**	**T212**	**H312** **HS312**	5.02
UKT 213	60 2-3/16 2-1/4 2-3/8	32 1-17/64	21 53/64	111 4-3/8	70 2-3/4	41 1-39/64	121 4-49/64	26 1-1/32	151 5-15/16	167 6-37/64	224 8-13/16	70 2-3/4	44 1-23/32	137 5-25/64	65 2.559	**UK 213**	**T213**	**H313** **HA313** **HE313** **HS313**	6.56
UKT 215	65 2-7/16 2-1/2	32 1-17/64	21 53/64	111 4-3/8	70 2-3/4	41 1-39/64	121 4-49/64	26 1-1/32	151 5-15/16	167 6-37/64	232 9-9/64	70 2-3/4	48 1-57/64	140 5-33/64	73 2.874	**UK 215**	**T215**	**H315** **HA315** **HE315**	7.52
UKT 216	70 2-11/16 2-3/4	32 1-17/64	21 53/64	11 4-3/8	70 2-3/4	41 1-39/64	121 4-49/64	26 1-1/32	165 6-1/2	184 7-1/4	235 9-1/4	70 2-3/4	51 2	140 5-33/64	78 3.071	**UK 216**	**T216**	**H316** **HA316** **HE316**	8.56
UKT 217	75 2-15/16 3	38 1-1/2	29 1-9/64	124 4-7/8	73 2-7/8	48 1-57/64	157 6-3/16	30 1-3/16	173 6-13/16	198 7-51/64	260 10-15/64	73 2-7/8	54 2-1/8	162 6-3/8	82 3.228	**UK 217**	**T217**	**H317** **HA317** **HE317**	11.38

FBJ®

Take-up Units

NAT 2 Series

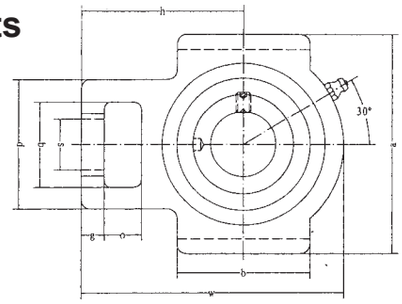

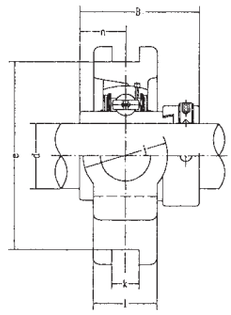

Unit No.	Dimensions mm / inch																Bearing No.	Housing No.	Weight (kg)
	d	O	g	p	q	s	b	k	e	a	w	j	l	h	B	n			
NAT 204	20	16	10	51	32	19	51	12	76	89	94	32	21	61	43.7	17.1	**NA 204**	**T204**	0.83
NAT 204-12	3/4	5/8	25/64	1-1/16	1-1/4	3/4	2-1/64	15/32	2-63/64	3-1/2	3-11/16	1-1/4	13/16	2-13/32	1.720	0.673	**NA 204-12**		0.83
NAT 205	25	16	10	51	32	19	51	12	76	89	97	32	24	62	44.4	17.5	**NA 205**		0.88
NAT 205-13	13/16																**NA 205-13**		0.93
NAT 205-14	7/8	5/8	25/64	1-1/16	1-1/4	3/4	2-1/64	15/32	2-63/64	3-1/2	3-13/16	1-1/4	15/16	2-7/16	1.748	0.689	**NA 205-14**	**T205**	0.92
NAT 205-15	15/16																**NA 205-15**		0.90
NAT 205-16	1																**NA 205-16**		0.88
NAT 206	30	16	10	56	37	22	57	12	89	102	113	37	28	70	48.4	18.3	**NA 206**		1.35
NAT 206-17	1-1/16																**NA 206-17**		1.40
NAT 206-18	1-1/8	5/8	25/64	2-7/32	1-29/64	55/64	2-1/4	15/32	3-1/2	4-1/64	4-29/64	4-29/64	1-3/32	2-3/4	1.906	0.720	**NA 206-18**	**T206**	1.37
NAT 206-19	1-3/16																**NA 206-19**		1.35
NAT 206-20	1-1/4																**NA 206-20**		1.32
NAT 207	35	16	13	64	37	22	64	12	89	102	129	37	30	78	51.1	18.8	**NA 207**		1.56
NAT 207-20	1-1/4																**NA 207-20**		1.63
NAT 207-21	1-5/16	5/8	33/64	2-33/64	1-29/64	55/64	2-33/64	15/32	3-1/2	4-1/64	5-5/64	1-29/64	1-3/16	3-5/64	2.012	0.740	**NA 204-21**	**T207**	1.59
NAT 207-22	1-3/8																**NA 207-22**		1.56
NAT 207-23	1-7/16																**NA 207-23**		1.53
NAT 208	40	19	16	83	49	29	83	16	102	114	144	49	33	89	56.3	21.4	**NA 208**		2.55
NAT 208-24	1-1/2	3/4	5/8	3-17/64	1-15/16	1-9/64	3-17/64	5/8	4-1/64	4-31/64	4-43/64	1-15/16	1-5/16	3-1/2	2.217	0.843	**NA 208-24**	**T208**	2.60
NAT 208-25	1-9/16																**NA 208-25**		2.56
NAT 209	45	19	16	83	49	29	83	16	102	117	144	49	35	87	56.3	21.4	**NA 209**		2.53
NAT 209-26	1-5/8																**NA 209-26**		2.64
NAT 209-27	1-11/16	3/4	5/8	3-17/64	1-15/16	1-9/64	3-17/64	5/8	4-1/64	4-39/64	5-43/64	1-15/16	1-3/8	3-27/64	2.217	0.843	**NA 209-27**	**T209**	2.59
NAT 209-28	1-3/4																**NA 209-28**		2.55
NAT 210	50	19	16	83	49	29	86	16	102	117	149	49	37	90	62.7	24.6	**NA 210**		2.62
NAT 210-29	1-13/16																**NA 210-29**		2.77
NAT 210-30	1-7/8	3/4	5/8	3-17/64	1-15/16	1-9/64	3-25/64	5/8	4-1/64	4-39/64	5-55/64	1-15/16	1-15/32	3-35/64	2.469	0.969	**NA 210-30**	**T210**	2.71
NAT 210-31	1-15/16																**NA 210-31**		2.65
NAT 210-32	2																**NA 210-32**		2.59
NAT 211	55	25	19	102	64	35	95	22	130	146	171	64	38	106	71.4	27.8	**NA 211**		4.32
NAT 211-32	2																**NA 211-32**		4.52
NAT 211-33	2-1/16	63/64	3/4	4-1/64	2-1/32	1-3/8	3-3/4	55/64	5-1/8	5-3/4	6-47/64	2-33/64	1-1/2	4-11/64	2.811	1.094	**NA 211-33**	**T211**	4.44
NAT 211-34	2-1/8																**NA 211-34**		4.37
NAT 211-35	2-3/16																**NA 211-35**		4.29
NAT 212	60	32	19	102	64	35	102	22	130	146	194	64	42	119	77.8	31	**NA 212**		5.31
NAT 212-36	2-1/4																**NA 212-36**		5.47
NAT 212-37	2-5/16	1-17/64	3/4	4-1/64	2-1/32	1-3/8	4-1/64	55/64	5-1/8	5-3/4	7-41/64	2-33/64	1-21/32	4-11/16	3.063	1.220	**NA 212-37**	**T212**	5.38
NAT 212-38	2-3/8																**NA 212-38**		5.33
NAT 212-39	2-7/16																**NA 212-39**		5.20
NAT 213	65	32	21	111	70	41	121	26	151	167	224	70	44	137	85.7	34.1	**NA 213**		7.21
NAT 213-40	2-1/2	1-17/64	53/64	4-3/8	2-3/4	1-39/64	4-49/64	1-1/32	5-15/16	6-37/64	8-13/16	2-3/4	1-23/32	5-25/64	3.374	1.343	**NA 213-40**	**T213**	7.31
NAT 213-41	2-9/16																**NA 213-41**		7.20
NAT 214	70	32	21	111	70	41	121	26	151	167	224	70	46	137	85.7	34.1	**NA 214**		7.55
NAT 214-42	2-3/8																**NA 214-42**	**T214**	7.79
NAT 214-43	2-11/16	1-17/64	53/64	4-3/8	2-3/4	1-39/64	4-49/64	1-1/32	5-15/16	6-37/64	8-13/16	2-3/4	1-13/16	5-25/64	3.374	1.343	**NA 214-43**		7.68
NAT 214-44	2-3/4																**NA 214-44**		7.56
NAT 215	75	32	21	111	70	41	121	26	151	167	232	70	48	140	92.1	37.3	**NA 215**		8.04
NAT 215-45	2-13/16																**NA 215-45**		8.34
NAT 215-46	2-7/8	1-17/64	53/64	4-3/8	2-3/4	1-39/64	4-49/64	1-1/32	5-15/16	6-37/64	9-9/64	2-3/4	1-57/64	5-33/64	3.626	1.426	**NA 215-46**	**T215**	8.21
NAT 215-47	2-15/16																**NA 215-47**		8.08
NAT 215-48	3																**NA 215-48**		7.94

UCTX Series

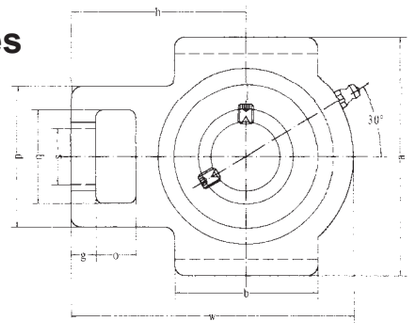

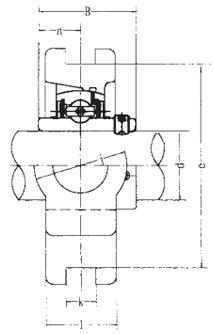

Take-up Units

Unit No.	Dimensions mm / inch																Bearing No.	Housing No.	Weight (kg)
	d	O	g	p	q	s	b	k	e	a	w	l	j	h	B_1	n			
UCT X05	25	16	12	56	37	22	57	12	89	102	113	28	37	70	38.1	15.9	**UC X05**		
UCT X05-13	13/16																**UC X05-13**		
UCT X05-14	7/8	5/8	15/32	2-7/32	1-15/32	55/64	2-1/4	0.472	3-1/2	4-1/64	4-29/64	1-3/32	1-29/64	2-3/4	1.5000	0.626	**UC X05-14**	**TX05**	1.4
UCT X05-15	15/16																**UC X05-15**		
UCT X05-16	1																**UC X05-16**		
UCT X06	30	16	15	64	37	22	64	12	89	102	129	30	37	78	42.9	17.5	**UC X06**		
UCT X06-17	1-1/16																**UC X06-17**		
UCT X06-18	1-1/8	5/8	19/32	2-33/64	1-29/64	55/64	2-33/64	0.472	3-1/2	4-1/64	5-5/64	1-3/16	1-29/64	3-5/64	1.6890	0.689	**UC X06-18**	**TX06**	1.8
UCT X06-19	1-3/16																**UC X06-19**		
UCT X06-20	1-1/4																**UC X06-20**		
UCT X07	35	19	17	83	49	29	83	16	102	114	144	36	49	88	49.2	19	**UC X07**		
UCT X07-21	1-5/16																**UC X07-21**	**TX07**	2.6
UCT X07-22	1-3/8	3/4	21/32	3-17/64	1-15/16	1-9/64	3-17/64	0.630	4-1/64	4-31/64	5-43/64	1-13/32	1-15/16	3-15/32	1.9370	0.748	**UC X07-22**		
UCT X07-23	1-7/16																**UC X07-23**		
UCT X08	40	19	17	83	49	29	83	16	102	117	144	36	49	87	49.2	19	**UC X08**		
UCT X08-24	1-1/2	3/4	21/32	3-17/64	1-15/16	1-9/64	3-17/64	0.630	4-1/64	4-39/64	5-43/64	1-13/32	1-15/16	3-27/64	1.9370	0.748	**UC X08-24**	**TX08**	2.6
UCT X08-25	1-9/16																**UC X08-25**		
UCT X09	45	19	18	83	49	29	86	16	102	117	151	38	49	92	51.6	19	**UC X09**		
UCT X09-26	1-5/8																**UC X09-26**		
UCT X09-27	1-11/16	3/4	23/32	3-17/64	1-15/16	1-9/64	3-25/64	0.630	4-1/64	4-39/64	5-15/16	1-1/2	1-15/16	3-5/8	2.0315	0.748	**UC X09-27**	**TX09**	2.8
UCT X09-28	1-3/4																**UC X09-28**		
UCT X09-29	1-13/16																**UC X09-29**		
UCT X10	50	25	21	102	64	35	95	22	130	146	171	42	64	106	55.6	22.2	**UC X10**		
UCT X10-30	1-7/8																**UC X10-30**	**TX10**	4.3
UCT X10-31	1-15/16	63/64	13/16	4-1/64	2-1/32	1-3/8	3-3/4	0.866	5-1/8	5-3/4	6-47/64	1-21/32	2-33/64	4-11/64	2.1890	0.874	**UC X10-31**		
UCT X10-32	2																**UC X10-32**		
UCT X11	55	32	21	102	64	35	102	22	130	146	194	44	64	119	65.1	25.4	**UC X11**		
UCT X11-33	2-1/16																**UC X11-33**		
UCT X11-34	2-1/8																**UC X11-34**	**TX11**	5.2
UCT X11-35	2-3/16	1-17/64	13/16	4-1/64	2-1/32	1-3/8	4-1/64	0.866	5-1/8	5-3/4	7-41/64	1-23/32	2-33/64	4-11/16	2.5630	1.000	**UC X11-35**		
UCT X11-36	2-1/4																**UC X11-36**		
UCT X11-37	2-5/16																**UC X11-37**		
UCT X12	60	32	23	111	70	41	121	26	151	167	224	48	70	137	65.1	25.4	**UC X12**		
UCT X12-38	2-3/8	1-17/64	29/32	4-3/8	2-3/4	1-39/64	4-49/64	1.024	5-15/16	6-37/64	8-13/16	1-57/64	2-3/4	5-25/64	2.5630	1.000	**UC X12-38**	**TX12**	7.6
UCT X12-39	2-7/16																**UC X12-39**		
UCT X13	65	32	23	111	70	41	121	26	151	167	224	48	70	137	74.6	30.2	**UC X13**		
UCT X13-40	2-1/2	1-17/64	29/32	4-3/8	2-3/4	1-39/64	4-49/64	1.024	5-15/16	6-37/64	8-13/16	1-57/64	2-3/4	5-25/64	2.9370	1.189	**UC X13-40**	**TX13**	7.6
UCT X13-41	2-9/16																**UC X13-41**		
UCT X14	70	32	23	111	70	41	121	26	151	167	232	48	70	140	77.8	33.3	**UC X14**		
UCT X14-42	2-5/8																**UC X14-42**	**TX14**	7.7
UCT X14-43	2-11/16	1-17/64	29/32	4-3/8	2-3/4	1-39/64	4-49/64	1.024	5-15/16	6-37/64	9-9/64	1-57/64	2-3/4	5-33/64	3.0630	1.311	**UC X14-43**		
UCT X14-44	2-3/4																**UC X14-44**		
UCT X15	75	32	23	111	70	41	121	28	165	184	235	48	70	140	82.6	33.3	**UC X15**		
UCT X15-45	2-13/16																**UC X15-45**		
UCT X15-46	2-7/8	1-17/64	29/32	4-3/8	2-3/4	1-39/64	4-49/64	1.102	6-1/2	7-1/4	9-1/4	1-57/64	2-3/4	5-33/64	3.2520	1.311	**UC X15-46**	**TX15**	7.55
UCT X15-47	2-15/16																**UC X15-47**		
UCT X15-48	3																**UC X15-48**		
UCT X16	80	38	30	124	73	48	157	28	173	198	260	54	73	162	85.7	34.1	**UC X16**		
UCT X16-49	3-1/16																**UC X16-49**		
UCT X16-50	3-1/8	1-1/2	1-3/16	4-7/8	2-7/8	1-57/64	6-3/16	1.102	6-13/16	7-51/64	10-15/64	2-1/8	2-7/8	6-3/8	3.3740	1.343	**UC X16-50**	**TX16**	11
UCT X16-51	3-1/16																**UC X16-51**		
UCT X16-52	3-1/4																**UC X16-52**		
UCT X17	85	38	30	124	73	48	157	28	173	198	560	54	73	162	96	39.7	**UC X17**		
UCT X17-53	3-5/16	1-1/2	1-3/16	4-7/8	2-7/8	1-57/64	6-3/16	1.102	6-13/16	7-51/64	10-15/64	2-1/8	2-7/8	6-3/8	3.7795	1.5630	**UC X17-53**	**TX17**	12
UCT X17-55	3-7/16																**UC X17-55**		

FBJ®

Take-up Units

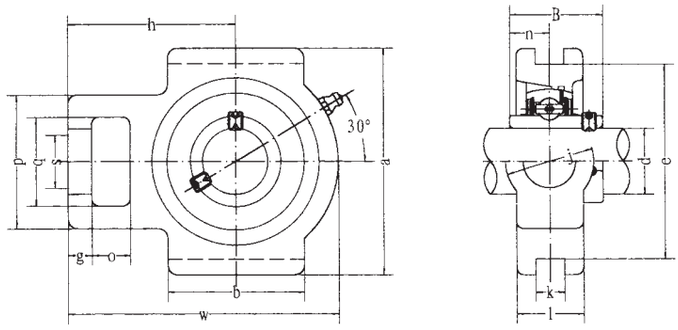

UCT 3 Series

Unit No.	Dimensions mm / inch																Bearing No.	Housing No.	Weight (kg)
	d	O	g	p	q	s	b	k	e	a	w	j	l	h	B_1	n			
UCT 305	25	16	14	62	36	26	65	12	80	89	122	36	26	76	38	15	**UC 305**		
UCT 305-13	13/16																**UC 305-13**		
UCT 305-14	7/8	5/8	9/16	2-7/16	1-13/32	1-1/32	2-9/16	0.472	3-5/32	3-1/2	4-13/16	1-13/32	1-1/32	3	1.4961	0.591	**UC 305-14**	**T305**	1.4
UCT 305-15	15/16																**UC 205-15**		
UCT 305-16	1																**UC 305-16**		
UCT 306	30	18	16	70	41	28	74	16	90	100	137	41	28	85	43	17	**UC 306**		
UCT 306-17	1-1/16	23/32	5/8	2-3/4	1-5/8	1-3/32	2-29/32	0.630	3-55/64	3-15/16	5-13/32	1-5/8	1-3/32	3-11/32	1.6929	0.669	**UC 306-17**	**T306**	1.8
UCT 306-18	1-1/8																**UC 306-18**		
UCT 306-19	1-3/16																**UC 306-19**		
UCT 307	35	20	17	75	45	30	80	16	100	111	150	45	32	94	48	19	**UC 307**		
UCT 307-20	1-1/4																**UC 307-20**		
UCT 307-21	1-5/16	25/32	43/64	2-15/16	1-25/32	1-3/16	2-5/32	0.630	3-15/16	4-3/8	5-29/32	1-25/32	1-1/4	3-11/16	1.8898	0.748	**UC 307-21**	**T307**	2.4
UCT 307-22	1-3/8																**UC 307-22**		
UCT 307-23	1-7/16																**UC 307-23**		
UCT 308	40	22	19	83	50	32	89	18	112	124	162	50	34	100	52	19	**UC 308**		
UCT 308-24	1-1/2	7/8	3/4	3-17/64	1-31/32	1-1/4	3-1/2	0.709	4-13/32	4-7/8	6-3/8	1-21/32	1-11/32	3-15/16	2.0472	0.748	**UC 308-24**	**T308**	3.0
UCT 308-25	1-9/16																**UC 308-25**		
UCT 309	45	24	20	90	55	34	97	18	125	138	178	55	38	100	57	22	**UC 309**		
UCT 309-26	1-5/8																**UC 309-26**	**T309**	5.0
UCT 309-27	1-11/16	15/16	25/32	3-17/32	2-5/32	1-11/32	3-13/16	0.709	4-59/64	5-7/16	7	2-5/32	1-1/2	4-11/32	2.2441	0.866	**UC 309-27**		
UCT 309-28	1-3/4																**UC 309-28**		
UCT 310	50	27	22	98	61	37	106	20	140	151	192	61	40	118	61	22	**UC 310**		
UCT 310-29	1-13/16																**UC 310-29**	**T310**	5.0
UCT 310-30	1-7/8	1-1/16	7/8	3-27/32	2-13/32	1-15/32	4-3/16	0.787	5-33/64	5-15/16	7-9/16	2-13/32	1-9/16	4-21/32	2.4016	0.866	**UC 310-30**		
UCT 310-31	1-15/16																**UC 310-31**		
UCT 311	55	29	23	105	66	39	115	22	150	163	207	66	44	127	66	25	**UC 311**		
UCT 311-32	2																**UC 311-32**		
UCT 311-33	2-1/16	1-15/16	29/32	4-1/8	2-19/32	1-17/32	4-17/32	0.866	5-29/32	6-13/32	8-5/32	2-19/32	1-23/32	5	2.5984	0.984	**UC 311-33**	**T311**	6.4
UCT 311-34	2-1/8																**UC 311-34**		
UCT 311-35	2-3/16																**UC 311-35**		
UCT 312	60	31	25	113	71	41	123	22	160	178	220	71	46	135	71	26	**UC 312**		
UCT 312-36	2-1/4																**UC 312-36**		
UCT 312-37	2-5/16	1-7/32	31/32	4-7/16	2-25/32	1-5/8	4-27/32	0.866	6-19/64	7	8-21/32	2-25/32	1-13/16	5-5/16	2.7953	1.024	**UC 312-37**	**312**	7.6
UCT 312-38	2-3/8																**UC 312-38**		
UCT 312-39	2-7/16																**UC 312-39**		
UCT 313	65	32	27	116	70	43	134	26	170	190	238	80	50	146	75	30	**UC 313**		
UCT 313-40	2-1/2	1-17/64	1-1/16	4-9/16	2-3/4	1-11/16	5-9/32	1.024	6-11/16	7-15/32	9-3/8	3-5/32	1-31/32	5-3/4	2.9528	1.181	**UC 313-40**	**T313**	9.7
UCT 313-41	2-9/16																**UC 313-41**		
UCT 314	70	36	27	130	85	46	140	26	180	202	252	90	52	155	78	33	**UC 314**		
UCT 314-42	2-5/8																**UC 314-42**	**T314**	11
UCT 314-43	2-11/16	1-13/32	1-1/16	5-1/8	3-11/32	1-13/16	5-1/2	1.024	7-3/32	7-15/16	9-29/32	3-17/32	2-1/16	6-3/32	3.2283	1.299	**UC 314-43**		
UCT 314-44	2-3/4																**UC 315-44**		
UCT 315	75	36	27	132	85	46	150	26	192	216	262	90	55	160	82	32	**UC 315**		
UCT 315-45	2-13/16																**UC 315-45**		
UCT 315-46	2-7/8																**UC 315-46**	**T315**	14
UCT 315-47	2-15/16	1-13/32	1-1/16	5-3/16	3-11/32	1-13/16	5-29/32	1.024	7-9/16	8-1/2	10-5/16	3-17/32	2-5/32	6-5/16	3.2283	1.260	**UC 315-47**		
UCT 315-48	3																**UC 315-48**		
UCT 316	80	42	30	150	98	53	160	30	204	230	282	102	60	174	86	34	**UC 316**		
UCT 316-49	3-1/16																**UC 316-49**	**T316**	16
UCT 316-50	3-1/8	1-21/32	1-3/16	5-29/32	3-27/32	2-3/32	6-5/16	1.181	8-1/32	9-1/16	11-3/32	4-1/32	2-3/8	6-27/32	3.2283	1.260	**UC 316-50**		
UCT 316-51	3-3/16																**UC 316-51**		
UCT 317	85	42	32	152	98	53	170	32	214	240	298	102	64	183	96	40	**UC 317**		
UCT 317-52	3-1/4																**UC 317-52**	**T317**	20
UCT 317-53	3-5/16	1-21/32	1-1/4	5-31/32	3-27/32	2-3/32	6-11/16	1.260	8-27/64	9-7/16	11-23/32	4-1/32	2-17/32	7-7/32	3.7795	1.575	**UC 317-53**		
UCT 317-55	3-7/16																**UC 317-55**		
UCT 318	90	46	32	160	106	57	175	32	228	255	312	110	66	192	96	40	**UC 318**		
UCT 318-55	3-7/16	1-13/16	1-1/4	6-5/16	4-3/16	2-1/4	6-7/8	1.260	8-31/32	10-1/32	12-9/32	4-11/32	2-19/32	7-9/16	3.7795	1.575	**UC 318-55**	**T318**	22
UCT 318-56	3-1/2																**UC 318-56**		
UCT 319	95	46	33	165	106	57	180	35	240	270	322	110	72	197	103	41	**UC 319**		
UCT 319-58	3-5/8																**UC 319-58**	**T319**	24
UCT 319-59	3-11/16	1-13/16	1-5/16	6-1/2	4-3/16	2-1/4	7-3/32	1.378	9-26/64	10-5/8	12-11/16	4-11/32	2-27/32	7-3/4	4.0551	1.614	**UC 319-59**		
UCT 319-60	3-3/4																**UC 319-60**		

SALF 2, SBLF 2 Series

Flange Units

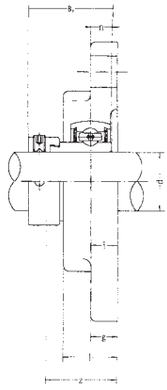

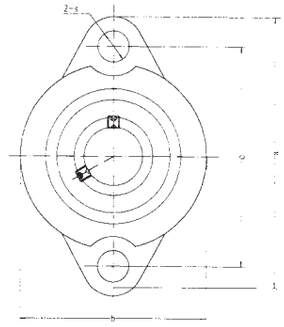

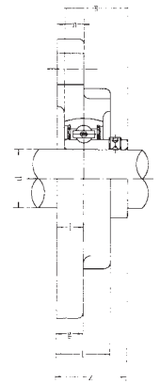

Unit No.	Dimensions mm / inch								Bearing Size mm / inch	SALF					SALF					Housing No.
	d	a	e	b	i	s	g	l		z	B_1	n	Bearing No.	Weight (kg)	z	B	n	Bearing no.	Weight (kg)	
SALF SBLF 201	12	81	63.5	56	9.5	8	9.5	18	M6	31.6	28.6	6.5	**SA 201**		25.5	22	6	**SB 201**	0.3	
201-8	3/4												**SA 201-8**					**SB 201-8**		
202	15												**SA 202**					**SB 202**		
202-9	9/16	3-3/16	2-1/2	2-13/64	3/8	5/16	3/8	45/64	1/4	1-1/4	1.1260	0.2559	**SA 202-9**	0.3	1	0.8661	0.2362	**SB 202-9**		**LF203**
202-10	5/8												**SA 202-10**					**SB 202-10**		
203	17												**SA 203**					**SB 203**		
203-11	11/16												**SA 203-11**					**SB 203-11**		
SALF SBLF 204	20	90	71.5	61	11	10	11	20	M8	34.5	31	7.5	**SA 204**	0.4	29	25	7	**SB 204**	0.3	**LF204**
204-12	3/4	3-35/64	2-13/16	2-13/32	7/16	25/64	7/16	25/32	5/16	1-23/64	1.2204	0.2953	**SA 204-12**		1-9/64	0.9843	0.2756	**SB 204-12**		
SALF SBLF 205	25	95	76	64	11	10	11	20	M8	34.5	31	7.5	**SA 205**		30.5	27	7.5	**SB 205**	0.4	
205-13	13/16												**SA 205-13**					**SB 205-13**		
205-14	7/8	3-3/4	2-63/64	2-33/64	7/16	25/64	7/16	25/32	5/16	1-23/64	1.2204	0.2953	**SA 205-14**	0.5	1-13/64	1.0630	0.2953	**SB 205-14**		**LF205**
205-15	15/16												**SA 205-15**					**SB 205-15**		
205-16	1												**SA 205-16**					**SB 205-16**		
SALF SBLF 206	30	113	90.5	76	12	12	12	22.5	M10	38.7	35.7	9	**SA 206**		34	30	8	**SB 206**	0.6	
206-17	1-1/16												**SA 206-17**					**SB 206-17**		
206-18	1-1/8	4-7/16	3-9/16	3	15/32	15/32	15/32	57/64	3/8	1-33/64	1.4055	0.3543	**SA 206-18**	0.7	1-11/32	1.1811	0.3150	**SB 206-18**		**LF206**
206-19	1-3/16												**SA 206-19**					**SB 206-19**		
206-20	1-1/4												**SA 206-20**					**SB 206-20**		
SALF SBLF 207	35	122	100	89	13	12	13	24	M10	42.4	38.9	9.5	**SA 207**		36.5	32	8.5	**SB 207**	0.8	
207-20	1-1/4												**SA 207-20**					**SB 207-20**		
207-21	1-5/16	4-13/16	3-15/16	3-1/2	33/64	15/32	33/64	61/64	3/8	1-43/64	1.5315	0.3740	**SA 207-21**	0.9	1-7/16	1.2598	0.3346	**SB 207-21**		**LF207**
207-22	1-3/8												**SA 207-22**					**SB 207-22**		
207-23	1-7/16												**SA 207-23**					**SB 207-23**		

FBJ®

Pressed Housing Flange Units

SAPP 2, SBPP 2 Series

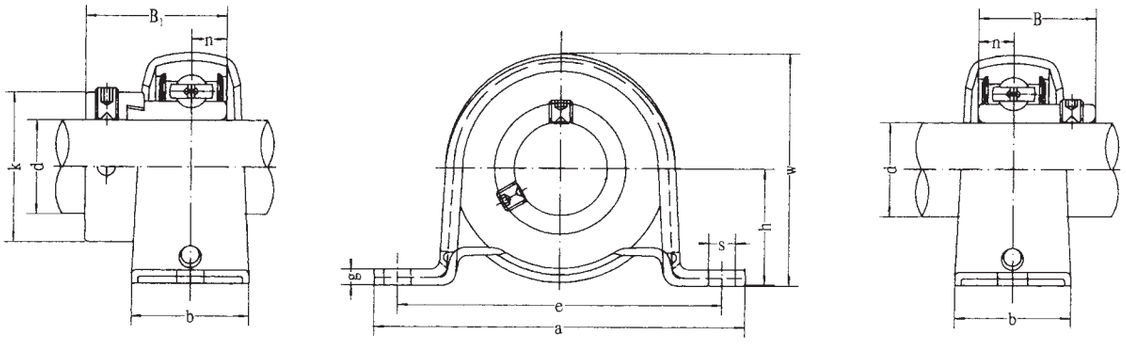

Unit No.		Dimensions mm / inch								Bolt Used mm / inch	SAPP			SBPP					Housing No.
		d	h	a	e	b	s	g	w		B1	n	Bearing No.	Weight (kg)	B	n	Bearing no.	Weight (kg)	
SAPP SBPP	201	12	22.2	86	68	25	9.5	3.2	43.8	M8	28.6	6.5	SA 201		22	6	SB 201		
	201-8	3/4											SA 201-8				SB 201-8		
	202	15											SA 202				SB 202		
	202-9	9/16	7/8	3-3/8	2-43/64	63/64	3/8	0.126	1-23/32	5/16	1.1260	0.2559	SA 202-9	0.19	0.8661	0.2362	SB 202-9	0.16	PP203
	202-10	5/8											SA 202-10				SB 202-10		
	203	17											SA 203				SB 203		
	203-11	11/16											SA 203-11				SB 203-11		
SAPP SBPP	204	20	25.4	98	76	32	9.5	3.2	50.5	M8	31	7.5	SA 204	0.23	25	7	SB 204	0.23	PP204
	204-12	3/4	1	3-27/32	2-63/64	1-1/4	3/8	0.126	1-63/64	5/16	1.2204	0.2953	SA 204-12		0.9843	0.2756	SB 204-12		
SBPP SBPP	205	25	28.6	108	86	32	11.5	4	56.6	M10	31	7.5	SA 205		27	7.5	SB 205		
	205-13	13/16											SA 205-13				SB 205-13		
	205-14	7/8	1-1/8	4-1/4	3-25/64	1-1/4	29/64	0.157	2-15/64	3/8	1.2204	0.2953	SA 205-14	0.32	1.0630	0.2953	SB 205-14	0.28	PP205
	205-15	15/16											SA 205-15				SB 205-15		
	205-16	1											SA 205-16				SB 205-16		
SAPP SBPP	206	30	33.3	117	95	38	11.5	4	66.3	M10	35.7	9	SA 206		30	8	SB 206		
	206-17	1-1/16											SA 206-17				SB 206-17		
	206-18	1-1/8	1-5/16	4-39/64	3-47/64	1-1/2	29/64	0.157	2-39/64	3/8	1.4055	03543	SA 206-18	0.50	1.1811	0.3150	SB 206-18	0.47	PP206
	206-19	1-3/16											SA 206-19				SB 206-19		
	206-20	1-1/4											SA 206-20				SB 206-20		
SAPP SBPP	207	35	39.7	129	106	42	11.5	4.6	78	M10	38.9	9.5	SA 207		32	8.5	SB 207		
	207-20	1-1/4											SA 207-20				SB 207-20		
	207-21	1-5/16	1-9/16	5-5/64	4-5/32	1-21/32	29/64	0.181	3-1/8	3/8	1.5315	0.3740	SA 207-21	0.71	1.2598	0.3346	SB 207-21	0.57	PP207
	207-22	1-3/8											SA 207-22				SB 207-22		
	207-23	1-7/16											SA 207-23				SB 207-23		

SAPF 2, SBPF 2 Series

Pressed Housing Flange Units

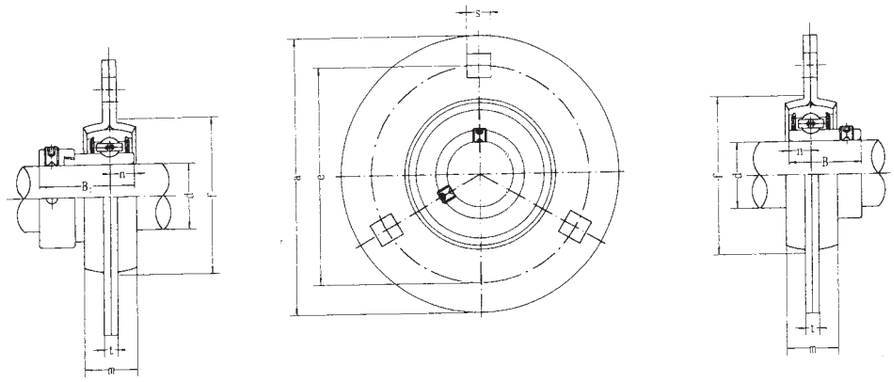

Unit No.		Dimensions mm / inch							Bolt Used mm / inch	SAPP			SBPP					Housing No.
		d	a	e	m	s	t	f		B1	n	Bearing No.	Weight (kg)	B	n	Bearing no.	Weight (kg)	
SAPF SBPF	201	12	81	63.5	14	7.1	4	49	M6	28.6	6.5	SA 201		22	6	SB 201		
	201-8	3/4										SA 201-8				SB 201-8		
	202	15										SA 202				SB 202		
	202-9	9/16	3-3/16	2-1/2	9/16	9/32	0.157	1-59/64	1/4	1.1260	0.2559	SA 202-9	0.3	0.8661	0.2362	SB 202-9	0.27	PFL203
	202-10	5/8										SA 202-10				SB 202-10		
	203	17										SA 203				SB 203		
	203-11	11/16										SA 203-11				SB 203-11		
SAPF SBPF	204	20	90	71.5	16	9	4	56	M8	31	7.5	SA 204	0.33	25	7	SB 204	0.33	PF204
	204-12	3/4	3-35/64	2-13/16	5/8	23/64	0.157	2-13/64	5/16	1.2204	0.2953	SA 204-12		0.9843	0.2756	SB 204-12		
SAPF SBPF	205	25	95	76	18	9	4	60	M8	31	7.5	SA 205		27	7.5	SB 205		
	205-13	13/16										SA 205-13				SB 205-13		
	205-14	7/8	3-3/4	2-63/64	23/32	23/64	0.157	2-23/64	5/16	1.2204	0.2953	SA 205-14	0.42	1.0630	0.2953	SB 205-14	0.38	PF205
	205-15	15/16										SA 205-15				SB 205-15		
	205-16	1										SA 205-16				SB 205-16		
SAPF SBPF	206	30	113	90.5	18	11	5.2	71	M10	35.7	9	SA 206		30	8	SB 206		
	206-17	1-1/16										SA 206-17				SB 206-17		
	206-18	1-1/8	4-7/16	3-9/16	23/32	7/16	0.205	2-51/64	3/8	1.4055	0.3543	SA 206-18	0.65	1.1811	0.3150	SB 206-18	0.62	PF206
	206-19	1-3/16										SA 206-19				SB 206-19		
	206-20	1-1/4										SA 206-20				SB 206-20		
SAPF SBPF	207	35	122	100	20	11	5.2	81	M10	38.9	9.5	SA 207		32	8.5	SB 207		
	207-20	1-1/4										SA 207-20				SB 207-20		
	207-21	1-5/16	4-13/16	3-15/16	25/32	7/16	0.205	3-3/16	3/8	1.5315	0.3740	SA 207-21	0.9	1.2598	0.3346	SB 207-21	0.82	PF207
	207-22	1-3/8										SA 207-22				SB 207-22		
	207-23	1-7/16										SA 207-23				SB 207-23		
SAPF SBPF	208	40	148	119	21	13.5	6.8	91	M12	43.7	11	SA 208		34	9	SB 208		
	208-24	1-1/2	5-13/16	4-11/16	13/16	17/32	0.268	3-37/64	1/2	1.7205	0.4331	SA 208-24	1.15	1.3386	0.3543	SB 208-24	1.1	PF208[1]
	208-25	1-9/16										SA 208-25				SB 208-25		

[1] PF208, with 4 Bolts

FBJ®

Pressed Housing Flange Units

SAPFL 2, SBPFL 2 Series

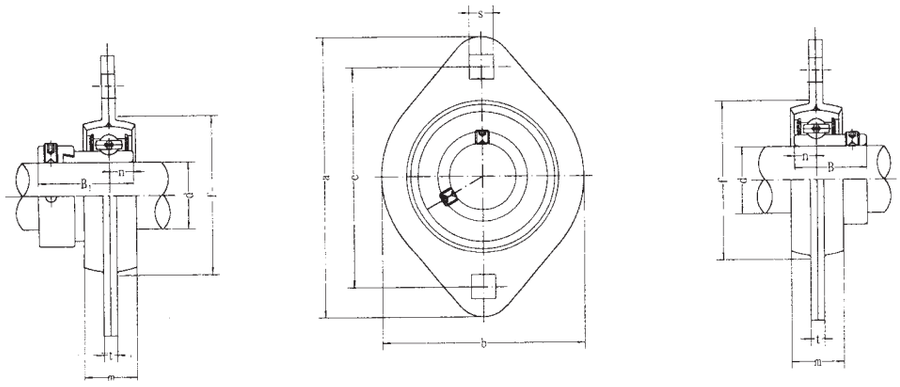

Unit No.		Dimensions mm inch								Bolt Used mm inch	SAPP			SBPP					Housing No.
		d	a	e	b	m	s	t	f (mm)		B1	n	Bearing No.	Weight (kg)	B	n	Bearing no.	Weight (kg)	
SAPFL SBPFL	201	12	81	63.5	59	14	7.1	4	49	M6	28.6	6.5	SA 201		22	6	SB 201		
	201-8	3/4											SA 201-8				SB 201-8		
	202	15											SA 202				SB 202		
	202-9	9/16	3-3/16	2-1/12	2-21/64	9/16	1-59/64	0.157	1-59/64	1/4	1.1260	0.2559	SA 202-9	0.22	0.8661	0.2362	SB 202-9	0.19	PFL203
	202-10	5/8											SA 202-10				SB 202-10		
	203	17											SA 203				SB 203		
	203-11	11/16											SA 203-11				SB 203-11		
SAPFL SAPFL	204	20	90	71.5	67	16	9	4	56	M8	31	7.5	SA 204		25	7	SB 204		PFL204
	204-12	3/4	3-35/64	2-13/16	2-41/64	5/8	23/64	0.157	2-13/64	5/16	1.2204	0.2953	SA 204-12	0.24	0.9843	0.2756	SB 204-12	0.24	
SBPFL SBPFL	205	25	95	76	71	18	9	4	60	M8	31	7.5	SA 205		27	7.5	SB 205		
	205-13	13/16											SA 205-13				SB 205-13		
	205-14	7/8	3-3/4	2-63/64	2-51/64	23/32	23/64	0.157	2-23/64	5/16	1.2204	0.2953	SA 205-14	0.32	1.0630	0.2953	SB 205-14	0.28	PFL205
	205-15	15/16											SA 205-15				SB 205-15		
	205-16	1											SA 205-16				SB 205-16		
SAPFL SBPFL	206	30	113	90.5	84	18	11	5.2	71	M10	35.7	9	SA 206		30	8	SB 206		
	206-17	1-1/16											SA 206-17				SB 206-17		
	206-18	1-1/8	4-7/16	3-9/16	3-5/16	23/32	7/16	0.205	2-51/54	3/8	1.4055	03543	SA 206-18	0.41	1.1811	0.3150	SB 206-18	0.38	PFL206
	206-19	1-3/16											SA 206-19				SB 206-19		
	206-20	1-1/4											SA 206-20				SB 206-20		
SAPFL SBPFL	207	35	122	100	94	20	11	5.2	81	M10	38.9	9.5	SA 207		32	8.5	SB 207		
	207-20	1-1/4											SA 207-20				SB 207-20		
	207-21	1-5/16	4-13/16	3-15/16	3-45/64	25/32	7/16	0.205	3-3/16	3/8	1.5315	0.3740	SA 207-21	0.52	1.2598	0.3346	SB 207-21	0.50	PFL207
	207-22	1-3/8											SA 207-22				SB 207-22		
	207-23	1-7/16											SA 207-23				SB 207-23		
SAPFL SBPFL	208	40	148	119	100	21	13.5	6.8	91	M12	43.7	11	SA 208		34	9	SB 208		
	208-24	1-1/2											SA 208-24	0.83			SB 208-24	0.80	PFL208
	208-25	1-9/16	5-13/16	4-11/16	3-15/16	13/16	17/32	0.268	3-37/64	1/2	1.7205	0.4331	SA 208-25		1.3386	0.3543	SB 208-25		

SAPFT 2, SBPFT 2 Series

Pressed Housing Flange Units

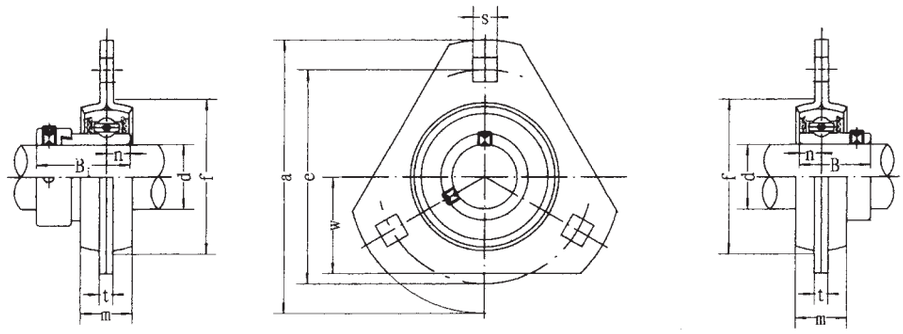

Unit No.	Dimensions mm / inch								Bolt Used mm / inch	SAPFT			SBPFT					Housing No.
	d	a	e	w	m	s	t	f (mm)		B1	n	Bearing No.	Weight (kg)	B	n	Bearing no.	Weight (kg)	
SAPFT 201	12	81	63.5	28.5	14	7.1	4	49	M6	28.6	6.5	**SA 201**		22	6	**SB 201**		
SBPFT																		
201-8	3/4											**SA 201-8**				**SB 201-8**		
202	15											**SA 202**				**SB 202**		
202-9	9/16	3-3/16	2-1/2	1-1/8	9/16	9/32	0.157	1-59/64	1/4	1.1260	0.2559	**SA 202-9**	0.26	0.8661	0.2362	**SB 202-9**	0.23	**PFT203**
202-10	5/8											**SA 202-10**				**SB 202-10**		
203	17											**SA 203**				**SB 203**		
203-11	11/16											**SA 203-11**				**SB 203-11**		
SAPFT 204	20	90	71.5	33	16	9	4	56	M8	31	7.5	**SA 204**		25	7	**SB 204**		**PFT204**
SBPFT													0.28				0.28	
204-12	3/4	3-35/64	2-13/16	1-19/64	5/8	23/64	0.157	2-13/64	5/16	1.2204	0.2953	**SA 204-12**		0.9843	0.2756	**SB 204-12**		
SBPFL 205	25	95	76	35	18	9	4	60	M8	31	7.5	**SA 205**		27	7.5	**SB 205**		
SBPFL																		
205-13	13/16											**SA 205-13**				**SB 205-13**		
205-14	7/8	3-3/4	2-63/64	1-3/8	23/32	23/64	0.157	2-23/64	5/16	1.2204	0.2953	**SA 205-14**	0.36	1.0630	0.2953	**SB 205-14**	0.36	**PFT205**
205-15	15/16											**SA 205-15**				**SB 205-15**		
205-16	1											**SA 205-16**				**SB 205-16**		
SAPFT 206	30	113	90.5	40	18	11	5.2	71	M10	35.7	9	**SA 206**		30	8	**SB 206**		
SBPFT																		
206-17	1-1/16											**SA 206-17**				**SB 206-17**		
206-18	1-1/8	4-7/16	3-9/16	1-37/64	23/32	7/16	0.205	2-51/64	3/8	1.4055	0.3543	**SA 206-18**	0.58	1.1811	0.3150	**SB 206-18**	0.55	**PFT206**
206-19	1-3/16											**SA 206-19**				**SB 206-19**		
206-20	1-1/4											**SA 206-20**				**SB 206-20**		
SAPFT 207	35	122	100	44.5	20	11	5.2	81	M10	38.9	9.5	**SA 207**		32	8.5	**SB 207**		
SBPFT																		
207-20	1-1/4											**SA 207-20**				**SB 207-20**		
207-21	1-5/16	4-13/16	3-15/16	1-3/4	25/32	7/16	0.205	3-3/16	3/8	1.5315	0.3740	**SA 207-21**	0.82	1.2598	0.3346	**SB 207-21**	0.74	**PFT207**
207-22	1-3/8											**SA 207-22**				**SB 207-22**		
207-23	1-7/16											**SA 207-23**				**SB 207-23**		

FBJ®

Disk Harrow Units

SF Series

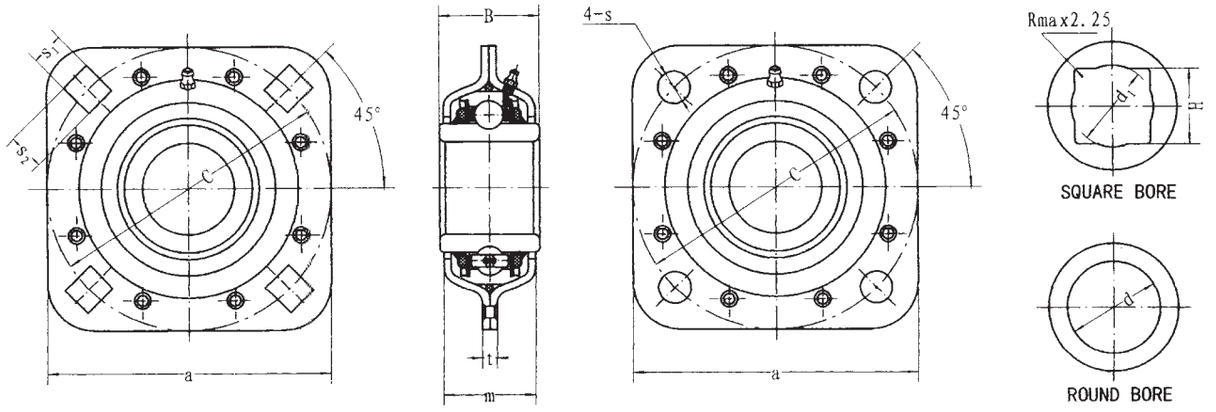

Unit No.	Dimensions mm inch											C (KN) Dynamic	Co (KN) Static
	H	d	a	B	m	t	C	s	S_1	S_2	d_1		
ST 209-1-1/8	29.972	-	127	42.8	42	6	127	13.5	13.5	17.45	32.0	24.36	17.71
ST 209-30S	31.353	-	127	42.8	42	6	127	13.5	13.5	17.45	34.5	24.36	17.71
ST 209-1-1/4	32.766	-	127	42.8	42	6	127	13.5	13.5	17.45	34.5	24.36	17.71
ST 491B	-	38.860	127	42.8	42	6	127	13.5	13.5	17.45	-	24.36	17.71
ST 209-40R	-	40.878	127	42.8	42	6	127	13.5	13.5	17.45	-	24.36	17.71
ST 491A	-	45.000	127	42.8	42	6	127	13.5	13.5	17.45	-	24.36	17.71
ST 209-45R	-	45.340	127	42.8	42	6	127	13.5	13.5	17.45	-	24.36	17.71
ST 491A[1)]	-	45.000	121	46	42	6	121	13.5	13.5	17.45	-	24.36	17.71
ST 211-1-1/2	38.890	-	139.7	50.8	46	8	139.7	13.5	13.5	17.45	42.0	33.37	25.11
ST 211-40S	40.878	-	139.7	50.8	46	8	139.7	13.5	13.5	17.45	43.1	33.37	25.11
ST 211-50R	-	50.400	139.7	50.8	46	8	139.7	13.5	13.5	17.45	-	33.37	25.11
ST 211-55R	-	55.575	139.7	50.8	46	8	139.7	13.5	13.5	17.45	-	33.37	25.11
ST 211-1-3/4	-	45.212	139.7	55.6	46	8	139.7	13.5	13.5	17.45	-	33.37	25.11
ST 211-2-3/16	-	55.575	139.7	55.6	46	8	139.7	13.5	13.5	17.45	-	33.37	25.11
ST 211-1-15/16	-	49.238	139.7	69.9	46	8	139.7	13.5	13.5	17.45	-	33.37	25.11
ST 211	-	55.000	139.7	55.6	46	8	139.7	13.5	13.5	17.45	-	33.37	25.11
ST 740	-	55.562	139.7	55.6	45	7	139.7	13.5	13.5	17.45	-	33.37	25.11

[1)] Special Dimensions

UC 2 Series

Bearing Inserts

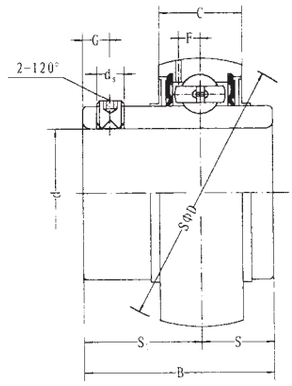

Bearing No.	Dimensions mm / inch									Basic Load Rating (N)		Weight (kg)
	d	D	B	C	S	S_1	G	d_s	F	Dynamic	Static	
*UC 201	12	47	31	17	12.7	18.3	4.8	M6 x 1	3.7	9880	6200	0.20
*UC 201-8	3/4	1.8504	1.2205	0.6693	0.500	0.720	0.189	1/4 -28UNF	0.146			0.19
*UC 202	15	47	31	17	12.7	18.3	4.8	M6 x 1	3.7	9880	6200	0.19
*UC 202-9	9/16	1.8504	1.2205	0.6693	0.500	0.720	0.189	1/4 -28UNF	0.146			0.19
*UC 202-10	5/8											0.19
*UC 203	17	47	31	17	12.7	18.3	4.8	M6 x 1	3.7	9800	6200	0.18
*UC 203-11	11/16	1.8504	1.2205	0.6693	0.500	0.720	0.189	1/4 -28UNF	0.146			0.17
*UC 204	20	47	31	17	12.7	18.3	4.8	M6 x 1	3.7	9800	6200	0.16
*UC 204-12	3/4	1.8504	1.2205	0.6693	0.500	0.720	0.189	1/4 -28UNF	0.146			0.16
*UC 205	25	52	34.1	17	14.3	19.8	5	M6 x 1	3.9			0.20
*UC 205-13	13/16											0.24
*UC 205-14	7/8	2.00472	1.3425	0.6693	0.563	0.780	0.197	1/4 -28UNF	0.154	10780	6980	0.23
*UC 205-15	15/16											0.21
*UC 205-16	1											0.20
*UC 206	30	62	38.1	19	15.9	22.2	5	M6 x 1	5.0			0.32
*UC 206-17	1-1/16											0.33
*UC 206-18	1-1/8	2.4409	1.5000	0.7480	0.626	0.874	0.197	1/4 -28UNF	0.197	14970	10040	0.34
*UC 206-19	1-3/16											0.32
*UC 206-20	1-1/4											0.31
*UC 207	35	72	42.9	20	17.5	25.4	7	M8 x 1	5.7			0.48
*UC 207-20	1-1/4											0.54
*UC 207-21	1-5/16	2.8346	1.6890	0.7874	0.689	1.000	0.276	5/16 -24UNF	0.224	19750	13670	0.51
*UC 207-22	1-3/8											0.48
*UC 207-23	1-7/16											0.45
*UC 208	40	80	49.2	21	19	30.2	8	M8 x 1	6.2			0.64
*UC 208-24	1-1/2	3.1496	1.9370	0.8268	0.748	1.189	0.315	5/16 -24UNF	0.244	22710	15940	0.68
*UC 208-25	1-9/16											0.65
*UC 209	45	85	49.2	22	19	30.2	8	M8 x 1	6.4			0.68
*UC 209-26	1-5/8											0.78
*UC 209-27	1-11/16	3.3465	1.9370	0.8661	0.748	1.189	0.315	5/16 -24UNF	0.252	24360	17710	0.74
*UC 209-28	1-3/4											0.70
*UC 210	50	90	51.6	24	19	32.6	10	M10 x 1	6.5			0.80
*UC 210-29	1-13/16											0.92
*UC 210-30	1-7/8	3.5433	2.0315	0.9449	0.748	1.283	0.394	3/8 -24UNF	0.256	26980	19840	0.87
*UC 210-31	1-15/16											0.82
*UC 210-32	2											0.78
*UC 211	55	100	55.6	25	22.2	33.4	10	M10 x 1	7.0			1.11
*UC 211-32	2											1.26
*UC 211-33	2-1/16											1.20
*UC 211-34	2-1/8	3.9370	2.1890	0.9843	0.874	1.315	0.394	3/8 -24UNF	0.276	33370	25110	1.15
*UC 211-35	2-3/16											1.09
*UC 212	60	110	65.1	27	25.4	39.7	10	M10 x 1	7.6			1.54
*UC 212-36	2-1/4											1.67
*UC 212-37	2-5/16	4.3307	2.5630	1.0630	1.000	1.563	0.394	3/8 -24UNF	0.299	36740	27970	1.59
*UC 212-38	2-3/8											1.52
*UC 212-39	2-7/16											1.45
UC 213	65	120	65.1	28	25.4	39.7	10	M10 x 1	8.5			1.85
UC 213-40	2-1/2	4.3307	2.5630	1.1024	1.000	1.563	0.394	3/8 -24UNF	0.335	44010	34180	1.94
UC 213-41	2-9/16											1.85
UC 214	70	125	74.6	29	30.2	44.4	12	M12 x 1.5	8.9			2.05
UC 214-42	2-5/8									46790	37590	2.26
UC 214-43	2-11/16	4.9213	2.9370	1.1417	1.189	1.748	0.472	7/16 -20UNF	0.350			2.16
UC 214-44	2-3/4											2.06
UC 215	75	130	77.8	30	33.3	44.5	12	M12 x 1.5	9.2			2.21
UC 215-45	2-13/16											2.46
UC 215-46	2-7/8	5.1181	3.0630	1.1811	1.311	1.752	0.472	7/16 -20UNF	0.362	50850	41260	2.35
UC 215-47	2-15/16											2.24
UC 215-48	3											2.12
UC 216	80	140	82.6	32	33.3	49.3	12	M12 x 1.5	9.5			2.80
UC 216-49	3-1/16									55040	45090	2.98
UC 216-50	3-1/8	5.5118	3.2520	1.2598	1.311	1.9409	0.472	7/16 -20UNF	0.374			2.85
UC 216-51	3-3/16											2.72
UC 217	85	150	85.7	34	34.1	51.6	12	M12 x 1.5	10.2			3.46
UC 217-52	3-1/4									64010	53280	3.68
UC 217-53	3-5/16	5.9055	3.3740	1.3386	1.343	2.031	0.472	7/16 -20UNF	0.402			3.54
UC 217-55	3-7/16											3.25
UC 218	90	160	96	36	39.7	56.3	12	M12 x 1.5	11.2	73830	60760	4.36
UC 218-56	3-1/12	6.2992	3.7795	1.4173	1.5630	2.217	0.472	1/2 -20UNF	0.441			4.47

*** Add SS in front of the bearing no. for stainless steel bearing. (Eg. SSUC 205)**

FBJ®

Bearing Inserts
(with Adapter mounted)

UK 2 Series

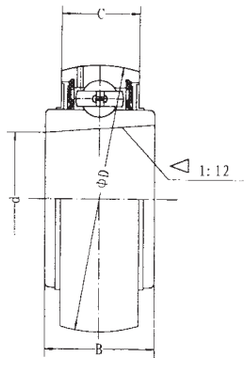

Bearing Unit / Insert

Bearing No.	Dimensions mm / inch				Basic Load Rating (N)		Weight (kg)
	d	D	B	C	Dynamic	Static	
UK 205	25 0.9843	52 2.0472	23 0.9055	17 0.6693	10780	6980	0.25
UK 206	30 1.1811	62 2.4409	26 1.0236	19 0.7480	14970	10040	0.36
UK 207	35 1.3780	72 2.8346	29 1.1417	20 0.7874	19750	13670	0.57
UK 208	40 1.5748	80 3.1496	31 1.2205	21 0.8268	22710	15940	0.74
UK 209	45 1.7717	85 3.3465	31 1.2205	22 0.8661	24360	17710	0.83
UK 210	50 1.96685	90 3.5433	32 1.2598	24 1.2598	26980	19840	0.97
UK 211	55 2.1654	100 3.9370	35 1.3780	25 0.9843	33370	25110	1.26
UK 212	60 2.3622	110 4.3307	38 1.4961	27 1.0630	36740	27970	1.59
UK 213	65 2.3622	120 4.3307	40 1.4961	25 1.0630	36740	27970	1.59
UK 213	65 2.5591	120 4.7244	40 1.5748	28 1.1024	44010	34180	1.76
UK 215	75 2.9528	130 5.1181	44 1.7323	30 1.1811	50850	41260	2.32
UK 216	80 3.1496	140 5.5118	45 1.7717	32 1.2598	55040	45090	3.06
UK 217	85 3.3465	150 5.9055	46 1.18110	34 1.3386	64010	53280	3.88
UK 218	90 3.5433	160 6.2992	47 1.8504	36 1.4173	73830	60760	4.74

NA 2 Series

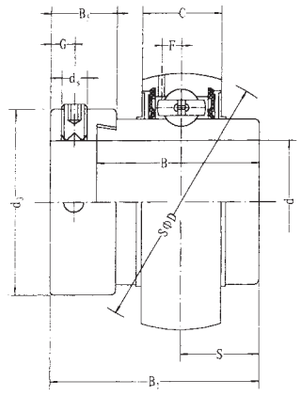

Bearing Inserts
(with Eccentric Locking Collar)

Bearing No.	Dimensions mm inch											Basic Load Rating (N)		Weight (kg)
	d	D	B_1	B	C	S	d_s	G	B_5	d_3	F	Dynamic	Static	
NA 204	20	47	43.7	34.2	17	17.1	M6 X 1	4.8	13.5	33.3	3.7	9880	6200	0.23
NA 204-12	3/4	1.8504	1.720	1.3465	0.6693	0.673	1/4-28UNF	0.189	0.531	1.311	0.146			0.23
NA 205	25	52	44.4	34.9	17	17.5	M6 X 1	4.8	13.5	38.1	3.9			0.27
NA 205-13	13/16													0.32
NA 205-14	7/8													0.31
NA 205-15	15/16	2.0472	1.748	1.3740	0.6693	0.689	1/4-28UNF	0.189	0.531	1.500	0.154	10780	6980	0.29
NA 205-16	1													0.27
NA 206	30	62	48.4	36.5	19	18.3	M8 X 1	6	15.9	44.5	5.0			0.45
NA 206-17	1-1/16													0.50
NA 206-18	1-1/8	2.4409	1.906	1.4370	0.7480	0.720	5/16-24UNF	0.236	0.626	1.752	0.197	14970	10040	0.47
NA 206-19	1-3/16													0.45
NA 206-20	1-1/4													0.42
NA 207	35	72	51.1	37.6	20	18.8	M8 X 1	6.8	17.5	55.6	5.7			0.60
NA 207-20	1-1/4													0.67
NA 207-21	1-5/16	2.8346	2.012	1.4803	0.7874	0.740	5/16-24NUF	0.268	0.689	2.189	0.224	19750	13670	0.63
NA 207-22	1-3/8													0.60
NA 207-23	1-7/16													0.57
NA 208	40	80	56.3	42.8	21	21.4	M8 X 1	6.8	18.3	60.3	6.2			0.79
NA 208-24	1-1/2	3.1496	2.217	1.6850	0.8268	0.843	5/16-24UNF	0.268	0.720	2.374	0.244	22710	15940	0.84
NA 208-25	1-9/16													0.80
NA 209	45	85	56.3	42.8	22	21.4	M8 X 1	6.8	18.3	63.5	6.4			0.85
NA 209-26	1-5/8													0.96
NA 209-27	1-11/16	3.3465	2.217	1.6850	0.8661	0.843	5/16-24UNF	0.268	0.720	2.5000	0.252	24360	17710	0.91
NA 209-28	1-3/4													0.87
NA 210	50	90	62.7	49.2	24	24.6	M8 X 1	6.8	18.3	69.9	6.5			0.99
NA 210-29	1-13/16													1.14
NA 210-30	1-7/8	3.5433	2.469	1.9370	0.9449	0.969	5/16-24UNF	0.268	0.720	2.752	0.256	26980	19840	1.08
NA 210-31	1-15/16													1.02
NA 210-32	2													0.96
NA 211	55	100	71.4	55.5	25	27.8	M10 X 1	8	20.7	76.2	7.0			1.32
NA 211-32	2													1.52
NA 211-33	2-1/16	3.9370	2.811	2.1850	0.9843	1.094	3/8-24UNF	0.315	0.815	3.000	0.276	33370	25110	1.44
NA 211-34	2-1/8													1.37
NA 211-35	2-3/16													1.29
NA 212	60	110	77.8	61.9	27	31	M10 X 1	8	22.3	84.2	7.6			1.88
NA 212-36	2-1/4													2.04
NA 212-37	2-5/16	4.3307	3.063	2.4370	1.0630	1.220	3/8-24UNF	0.315	0.878	3.315	0.299	36740	27970	1.95
NA 212-38	2-3/8													1.90
NA 212-39	2-7/16													1.77
NA 213	65	120	85.7	68.6	28	34.1	M10 X 1	8.5	23.5	86	8.5			2.41
NA 213-40	2-1/2	4.7244	3.374	2.7008	1.1024	1.343	3/8-24UNF	0.335	0.925	3.386	0.335	44010	34180	2.51
NA 213-41	2-9/16													2.40
NA 214	70	125	85.7	68.6	29	34.1	M10 X 1	8.5	23.5	90	8.9			2.55
NA 214-42	2-3/8													2.79
NA 214-43	2-11/16	4.9213	3.374	2.7008	1.1417	1.343	3/8-24UNF	0.335	0.925	3.543	0.350	46790	37590	2.68
NA 214-44	2-3/4													2.56
NA 215	75	130	92.1	75	30	37.3	M10 X 1	8.5	23.5	102	9.2			2.84
NA 215-45	2-13/16													3.14
NA 215-46	2-7/8	5.1181	3.626	2.9528	1.1811	1.469	3/8-24UNF	0.335	0.925	4.016	0.362	50850	41260	3.01
NA 215-47	2-15/16													2.88
NA 215-48	3													2.74

FBJ®

Bearing Inserts

UCX Series

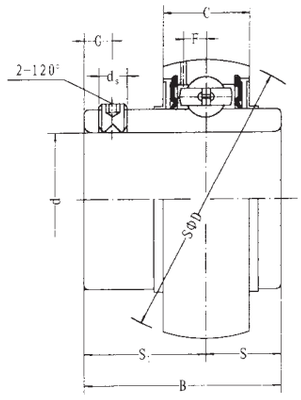

Bearing No.	Dimensions mm / inch									Basic Load Rating (N)		Weight (kg)
	d	D	B	C	S	S_1	G	d_s	F	Dynamic	Static	
UC X05	25	62	38.1	19	15.9	22.2	5	M6X1	5.0			
UC X05-13	13/16											
UC X05-14	7/8	2.4409	1.5000	0.7480	0.626	0.874	0.197	1/4-28UNF	0.197	14970	10040	0.39
UC X05-15	15/16											
UC X05-16	1											
UC X06	30	72	42.9	20	17.5	25.4	7	M8X1	5.7			
UC X06-17	1-1/16	2.8346	1.6890	0.7874	0.689	1.000	0.276	5/16-24UNF	0.224	19750	13670	0.68
UC X06-18	1-1/8											
UC X06-19	1-3/16											
UC X07	35	80	49.2	21	19	30.2	8	M8X1	6.2			
UC X07-21	1-5/16	3.1496	1.9370	0.8268	0.748	1.189	0.315	5/16-24UNF	0.244	22710	15940	0.82
UC X07-22	1-3/8											
UC X07-23	1-7/16											
UC X08	40	85	49.2	22	19	30.2	8	M8X1	6.4			
UC X08-24	1-1/2	3.3465	1.9370	0.8661	0.748	1.189	0.315	5/16-24UNF	0.252	24360	17710	0.93
UC X08-25	1-9/16											
UC X09	45	90	51.6	24	19	32.6	10	M10X1	6.5			
UC X09-26	1-5/8	3.5433	2.0315	0.9449	0.748	1.283	0.394	3/8-24UNF	0.256	26980	19840	1.00
UC X09-27	1-11/16											
UC X09-28	1-3/4											
UC X10	50	100	55.6	25	22.2	33.4	10	M10X1	7.0			
UC X10-30	1-7/8	3.9370	2.1890	0.9843	0.874	1.315	0.394	3/8-24UNF	0.276	33370	25110	1.35
UC X10-31	1-15/16											
UC X11	55	110	65.1	27	25.4	39.7	10	M10X1	7.6			
UC X11-33	2-1/16											
UC X11-34	2-1/8	4.3307	2.5630	1.0630	1.000	1.563	0.394	3/8-24UNF	0.299	36740	27970	1.90
UC X11-35	2-3/16											
UC X12	60	120	65.1	28	25.4	39.7	10	M10X1	8.5			
UC X12-38	2-3/8	4.3307	2.5630	1.1024	1.000	1.563	0.394	3/8-24UNF	0.335	44010	34180	2.27
UC X12-39	2-7/16											
UC X13	65	125	74.6	29	30.2	44.4	12	M12X1.5	8.9			
UC X13-40	2-1/2	4.9213	2.9370	1.1417	1.189	1.748	0.472	1/2-20UNF	0.350	46790	37590	2.45
UC X13-41	2-9/16											
UC X14	70	130	77.8	30	33.3	44.5	12	M12X1.5	9.2			
UC X14-42	2-3/8											
UC X14-43	2-11/16	5.1181	3.0630	1.1811	1.311	1.752	0.472	1/2-20UNF	0.362	50850	41260	2.47
UC X14-44	2-3/4											
UC X15	75	140	82.6	32	33.3	49.3	12	M12X1.5	9.5			
UC X15-45	2-13/16											
UC X15-46	2-7/8	5.5118	3.2520	1.2598	1.311	1.9409	0.472	1/2-20UNF	0.374	55040	45090	3.11
UC X15-47	2-15/16											
UC X15-48	3											
UC X16	80	150	85.7	34	34.1	51.6	12	M12X1.5	10.2			
UC X16-49	3-1/16	5.9055	3.3740	1.3386	1.343	2.031	0.472	1/2-20UNF	0.402	64010	53280	3.79
UC X16-50	3-1/8											
UC X16-51	3-3/16											
UC X17	85	160	96	36	39.7	56.3	12	M12X1.5	11.2			
UC X17-53	3-5/16	6.2992	3.7795	1.4173	1.5630	2.217	0.472	1/2-20UNF	0.441	73830	60760	4.82
UC X17-55	3-7/16											

UC 3 Series

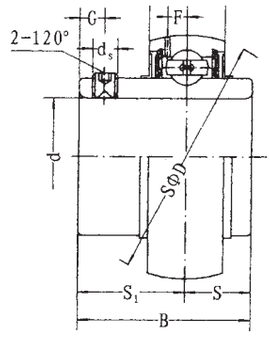

Bearing Inserts

Unit No.	Dimensions mm / inch									Basic Load Rating (N)		Weight (kg)
	d	D	B	C	S	S_1	G	d_s	F	Dynamic	Static	
UC 305	25	62	38	20	15	23	6	M6 x 1	5.4			0.35
UC 305-13	13/16											0.40
UC 305-14	7/8	2.4409	1.4961	07874	0.591	0.906	0.236	1/4-28 UNF	0.213	17220	11930	0.38
UC 305-15	1											0.36
UC 305-16												0.35
UC 306	30	72	43	23	17	26	6	M6 x 1	5.7			0.56
UC 306-17	1-1/16											0.61
UC 306-18	1-1/8	2.8346	1.6929	0.9055	0.669	1.024	0.236	1/4-28 UNF	0.225	20770	14170	0.58
UC 306-19	1-3/16											0.56
UC 307	35	80	48	25	19	29	8	M8 x 1	6.2			0.71
UC 307-20	1-1/4											0.77
UC 307-21	1-5/16	3.1496	1.8898	0.9843	0.748	1.142	0.315	5/16-24 UNF	0.224	25660	17920	0.74
UC 307-22	1-1/8											0.71
UC 307-23	1-7/16											0.68
UC 308	40	90	52	27	19	33	10	M10 x 1	7.0			0.96
UC 308-24	1-1/2	3.5433	2.0472	1.0630	0.748	1.299	0.394	3/8-24 UNF	0.276	31350	22380	1.01
UC 308-25	1-9/16											0.97
UC 309	45	100	57	30	22	35	10	M10 x 1	7.8			1.28
UC 309-26	1-5/8											1.39
UC 309-27	1-11/16	3.9370	2.2441	1.1811	0.866	1.378	0.394	3/8-24UNF	0.307	40660	30000	1.35
UC 309-28	1-3/4											1.30
UC 310	50	110	61	32	22	39	12	M12 x 1.5	8.5			1.65
UC 310-29	1-13/16											1.97
UC 310-30	1-7/8	4.3307	2.4016	1.2598	0.866	1.535	0.472	1/2-20UNF	0.335	47580	35710	1.74
UC 310-31	1-15/16											1.68
UC 311	55	120	66	34	25	41	12	M12 x 1.5	9.2			2.07
UC 311-32	2											2.25
UC 311-33	2-1/16	4.7244	2.5984	1.3386	0.984	1.614	0.472	1/2-20UNF	0.362	55050	41910	2.18
UC 311-34	2-1/8											2.12
UC 311-35	2-3/16											2.04
UC 312	60	130	71	36	26	45	12	M12 x 1.5	9.8			2.60
UC 312-36	2-1/4											2.75
UC 312-37	2-5/16	5.1181	2.7953	1.4173	1.0236	1.772	0.472	1/2-20UNF	0.386	62880	48600	2.67
UC 312-38	2-3/8											2.58
UC 312-39	2-7/16											2.50
UC 316	80	170	86	44	34	52	14	M14 x 1.5	12.5			5.55
UC 316-49	3-1/16											5.72
UC 316-50	3-1/8	6.6929	3.3858	1.7323	1.339	2.047	0.551	9/16-18UNF	0.492	94570	80350	5.58
UC 316-51	3-3/16											5.49
UC 317	85	180	96	46	40	56	16	M16 x 1.5	13.1			6.67
UC 317-52	3-1/4											6.89
UC 317-53	3-5/16	7.0866	3.7795	1.8110	1.575	2.205	0.630	5/8-18UNF	0.516	102050	89520	3.67
UC 317-55	3-7/16											6.44
UC 318	90	190	96	48	40	56	16	M16 x 1.5	13.8			7.56
UC 318-55	3-7/16	7.4803	3.7795	1.8898	1.575	2.205	0.630	5/8-18UNF	0.543	110810	100760	7.85
UC 318-56	3-1/2											7.67
UC 319	95	200	103	50	41	62	16	M16 x 1.5	14.7			8.70
UC 319-58	3-5/8											9.03
UC 319-59	3-11/16	7.8740	4.0551	1.9585	1.614	2.441	0.630	5/8-18UNF	0.579	120510	103750	8.85
UC 319-60	3-3/4											8.66
UC 320	100	215	108	54	42	66	20	M18 x 1.5	15.7	170630	137260	11.18
UC 320-64	4	8.4646	4.2519	2.2160	1.6535	2.5984	0.7874		0.618			11.09

FBJ®

Bearing Inserts

CS 2 Series

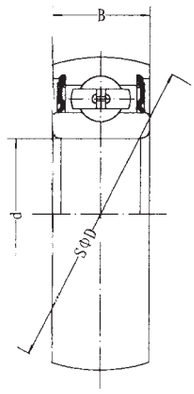

Bearing No.	Dimensions mm / inch			Basic Load Rating (N)		Weight (kg)
	d	D	B	Dynamic	Static	
CS 200-2RS	10 0.3937	30 0.3543	9 1.1811	520	245	0.030
CS 201-2RS	12 0.4724	32 0.3937	10 1.2598	690	310	0.035
CS 202-2RS	15 0.5906	35 0.4331	11 1.3780	780	380	0.040
CS 203-2RS	17 0.6693	40 1.5748	12 0.4724	7360	4480	0.06
CS 204-2RS	20 0.7874	47 1.8504	14 0.5512	9880	6200	0.10
CS 205-2RS	25 0.9843	52 2.0472	15 0.5906	10780	6980	0.13
CS 206-2RS	30 1.1811	62 2.4409	16 0.6299	14970	10040	0.20
CS 207-2RS	35 1.3780	72 2.8346	17 0.6693	19750	13670	0.29
CS 208-2RS	40 1.5748	80 3.1496	18 0.7087	22710	15940	0.37
CS 209-2RS	45 1.7717	85 3.3465	19 0.7480	24360	17710	0.46
CS 210-2RS	50 1.9685	90 3.5433	20 0.7874	26980	19840	0.57

SER 2 Series

Bearing Inserts
(with Snap Ring)

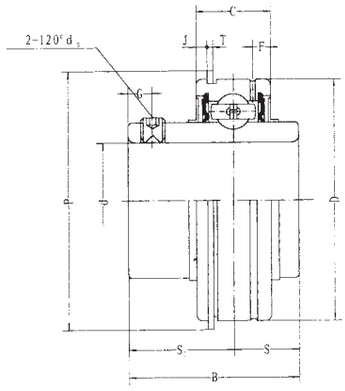

Bearing No.	Dimensions mm / inch												Basic Load Rating (N)		Weight (kg)
	d	D	B	C	S	S_1	T	F	J	P	G	d_2	Dynamic	Static	
SER 204	20	47	31	15.9	10.3	20.7	1.12	3.8	2.46	52.7	4.8	M6 x 1	9880	6200	0.21
SER 204-12	3/4	1.8504	1.2205	0.6260	0.406	0.815	0.044	0.150	0.097	2.075	0.189	1/4-28UNF			
SER 205	25	52	34.9	19	13.1	21.8	1.12	5.2	2.46	57.9	5	M6 x 1			
SER 205-13	13/16														
SER 205-14	7/8	2.0472	1.3740	0.7480	0.516	0.858	0.044	0.205	0.097	2.280	0.197	1/4-28UNF	10780	6980	0.27
SER 205-15	15/16														
SER 205-16	1														
SER 206	30	62	38.1	22.2	15.9	22.2	1.7	5.6	3.28	67.7	5	M6 x 1			
SER 206-17	1-1/16														
SER 206-18	1-1/8	2.4409	1.5000	0.8740	0.626	0.874	0.067	0.220	0.129	2.665	0.197	1/4-28UNF	14970	10040	0.39
SER 206-19	1-3/16														
SER 206-20	1-1/4														
SER 207	35	72	42.9	23.8	17.5	25.4	1.7	5.6	3.28	78.6	6.7	M8 x 1			
SER 207-20	1-1/4														
SER 207-21	1-5/16	2.8346	1.6890	0.9370	0.689	1.000	0.067	0.220	0.129	3.094	0.264	5/16-24UNF	19750	13760	0.45
SER 207-22	1-3/8														
SER 207-23	1-7/16														
SER 208	40	80	49.2	27.8	19	30.2	1.7	6.4	3.28	86.9	8	M8 x 1			
SER 208-24	1-1/2	3.1496	1.9370	1.0945	0.748	1.189	0.067	0.252	0.129	3.409	0.315	5/16-24UNF	22710	15940	0.81
SER 208-25	1-9/16														
SER 209	45	85	49.2	27.8	19	30.2	1.7	6.4	3.28	91.6	8	M8 x 1			
SER 209-26	1-5/8														
SER 209-27	1-11/16	3.3465	1.9370	1.0945	0.748	1.189	0.067	0.252	0.129	3.606	0.315	5/16-24UNF	24360	17710	0.90
SER 209-28	1-3/4														
SER 210	50	90	51.6	28.6	19	32.6	2.46	7.5	3.28	96.5	10	M10 x 1			
SER 210-29	1-13/16														
SER 210-30	1-7/8	3.5433	2.0315	1.1260	0.748	1.283	0.097	0.295	0.129	3.799	0.394	3/8-24UNF	26980	19840	0.98
SER 210-31	1-15/16														
SER 210-32	2														
SER 211	55	100	55.6	30.2	22.2	33.4	2.46	7.5	3.28	106.5	10	M10 x 1			
SER 211-2	2														
SER 211-33	2-1/16	3.9370	2.1890	1.1890	0.874	1.315	0.097	0.295	0.129	4.193	0.394	3/8-24UNF	33370	25110	1.40
SER 211-34	2-1/8														
SER 211-35	2-3/16														
SER 212	60	110	65.1	31.8	25.4	39.7	2.46	7.5	3.28	1116.6	10	M10 x 1			
SER 212-32	2														
SER 212-36	2-1/4														
SER 212-37	2-5/16	4.3307	2.5630	1.2520	1.000	1.563	0.097	0.295	0.129	4.591	0.394	3/8-24UNF	36740	27970	1.89
SER 212-38	2-3/8														
SER 212-39	2-7/16														

FBJ®

Bearing Inserts
(with Eccentric Locking Collar)

SA 2 Series

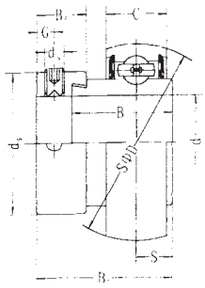

SA2

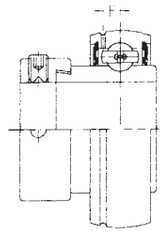

SA2G

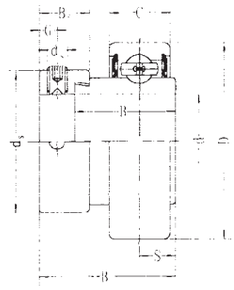

CSA2

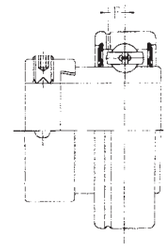

CSA2G

Bearing No.	Dimensions mm / inch										Basic Load Rating (N)		Weight (kg)
	d	D	B_1	B	C	S	d_s	G	B_5	d_5	Dynamic	Static	
SA 201	12	40	28.6	19.1	12	6.5	M6 x 1	4.8	13.5	28.6	7360	4480	0.12
SA 201-8	3/4	1.5748	1.126	0.7520	0.4724	0.256	1/4-28UNF	0.189	0.531	1.126			0.12
SA 202	15	40	28.6	19.1	12	6.5	M6 x 1	4.8	13.5	28.6	7360	4480	0.10
SA 202-9	9/16												0.10
SA 202-10	5/8	1.5748	1.126	0.7520	0.4724	0.256	1/4-28UNF	0.189	0.531	0.126			0.10
SA 203	17	40	28.6	19.1	12	6.5	M6 x 1	7.8	13.5	28.6	7360	4480	0.09
SA 203-11	11/16	1.5748	1.126	0.7520	0.4724	0.256	1/4-28UNF	0.189	0.531	1.126			0.09
SA 204	20	47	31	21.5	14	7.5	M6 x 1	4.8	13.5	33.3	9880	6200	0.16
SA 204-12	3/4	1.8504	1.220	0.8465	0.5512	0.295	1/4-28UNF	0.189	0.531	1.311			0.16
SA 205	25	52	31	21.5	15	7.5	M6 x 1	4.8	13.5	38.1	10780	6980	0.20
SA 205-13	13/16												0.22
SA 205-14	7/8												0.21
SA 205-15	15/16	2.0472	1.220	0.8465	0.5906	0.295	1/4-28UNF	0.189	0.531	1.500			0.21
SA 205-16	1												0.20
SA 206	30	62	35.7	23.8	16	9	M8 x 1	6	15.9	44.5	14970	10040	0.30
SA 206-17	1-1/16												0.32
SA 206-18	1-1/8	2.4409	1.406	0.9370	0.6299	0.354	5/16-28UNF	0.236	0.626	1.752			0.31
SA 206-19	1-3/16												0.30
SA 206-20	1-1/4												0.29
SA 207	35	72	38.9	25.4	17	9.5	M8 x 1	6.8	17.5	55.6	19750	13670	0.42
SA 207-20	1-1/4												0.46
SA 207-21	1-5/16												0.43
SA 207-22	1-3/8	2.8346	1.531	1.000	0.6693	0.374	5/16-24UNF	0.268	0.689	2.189			0.42
SA 207-23	1-7/16												0.41
SA 208	40	80	43.7	30.2	18	11	M8 x 1	6.8	18.3	60.3	22710	15940	0.60
SA 208-24	1-1/2	3.1496	1.721	1.1890	0.7087	0.433	5/16-24UNF	0.268	0.720	2.374			0.58
SA 208-25	1-9/16												0.60
SA 209	45	85	43.7	30.2	19	11	M8 x 1	6.8	18.3	63.5	24360	17710	0.90
SA 209-26	1-5/8												
SA 209-27	1-11/16	3.3465	1.721	1.1890	0.7480	0.433	5/16-24UNF	0.268	0.720	2.500			
SA 209-28	1-3/4												
SA 210	50	90	43.7	30.2	20	11	M8 x 1	6.8	18.3	69.9	26980	19840	0.98
SA 210-29	1-13/16												
SA 210-30	1-7/8	3.5433	1.721	1.1890	0.7874	0.433	5/16-24UNF	0.268	0.720	2.752			
SA 210-32	2												
SA 211	55	100	48.4	32.5	21	12	M10 x 1	8	20.7	76.2	33370	25110	1.26
SA 211-32	2												
SA 211-33	2-1/16												
SA 211-34	2-1/8	3.9370	1.906	1.2795	0.8268	0.472	3/8-24UNF	0.315	0.815	3.000			
SA 211-35	2-3/16												
SA 212	60	110	53.1	37.2	22	13.5	M10 x 1	8	22.3	84.2	36740	27970	1.70
SA 212-36	2-1/4												
SA 212-37	2-5/16												
SA 212-38	2-3/8	4.3307	2.091	1.4646	0.8661	0.532	3/8-24UNF	0.315	0.878	3.315			
SA 212-39	2-7/16												

SB 2 Series

Bearing Inserts

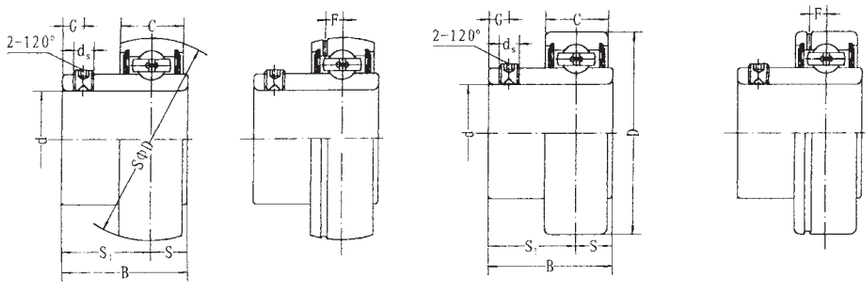

SB2 SB2G CSB2 CSB2G

Bearing No.	Dimensions mm / inch								Bearing No.	Housing No.	Weight (kg)
	d	D	B	C	S	S_1	d_s	G			
SB 201	12	40	22	12	6	16	**M5 x 0.8**	4.5	7360	4480	0.10
SB 201-8	3/4	1.5748	0.8661	0.4724	0.236	0.630	**# 10-32**	0.177			0.10
SB 202	15	40	22	12	6	16	**M5 x 0.8**	4.5			0.10
SB 202-9	9/16	1.5748	0.8661	0.4724	0.236	0.630	**# 10-32**	0.177	7360	4480	0.10
SB 202-10	5/8										0.10
SB 203	17	40	22	12	6	16	**M5 x 0.8**	4.5	7360	4480	0.10
SB 203-11	11/16	1.5748	0.8661	0.4724	0.236	0.630	**# 10-32**	0.177			0.10
SB 204	20	47	25	14	7	16	**M6 x 1**	4.5	9880	6200	0.13
SB 204-12	3/4	1.8504	0.9843	0.5512	0.276	0.709	**1/4-28 UNF**	0.177			0.14
SB 205	25	52	27	15	7.5	19.5	**M6 x 1**	5.5			0.16
SB 205-13	13/16										0.19
SB 205-14	7/8	2.0472	1.0630	0.5906	0.295	0.768	**1/4-28 UNF**	0.217	10780	6980	0.18
SB 205-15	15/16										0.17
SB 205-16	1										0.16
SB 206	30	62	30	16	8	22	**M6 x 1**	6			0.25
SB 206-17	1-1/16										0.28
SB 206-18	1-1/8	2.4409	1.1811	0.6299	0.315	0.866	**1/4-24 UNF**	0.236	14970	10040	0.26
SB 206-19	1-3/16										0.25
SB 206-20	1-1/4										0.24
SB 207	35	72	32	17	8.5	23.5	**M8 x 1**	6.5			0.36
SB 207-20	1-1/4										0.43
SB 207-21	1-5/16	2.8346	1.2598	0.6693	0.335	0.925	**5/16-24 UNF**	0.256	19750	13670	0.41
SB 207-22	1-3/8										0.38
SB 207-23	1-7/16										0.37
SB 208	40	80	34	18	9	25	**M8 x 1**	7			0.60
SB 208-24	1-1/2	3.1496	1.3386	0.7087	0.354	0.984	**5/16-24 UNF**	0.276	22710	15940	0.58
SB 208-25	1-9/16										0.60
SB 209	45	85	41.2	19	10.2	31	**M8 x 1**	8.2			
SB 209-26	1-5/8								24360	17710	0.80
SB 209-27	1-11/16	3.3465	1.6220	0.7480	0.402	1.220	**5/16-24 UNF**	0.323			
SB 209-28	1-3/4										
SB 210	50	90	43.5	20	10.9	32.6	**M10 x 1**	9.2			
SB 210-29	1-13/16										
SB 210-30	1-7/6	3.5433	1.7125	0.7874	0.429	1.283	**3/8-24 UNF**	0.362	26980	19840	0.80
SB 210-31	1-15/16										
SB 210-32	2										
SB 211	55	100	45.3	21	11.8	33.5	**M10 x 1**	9.8			
SB 211-32	2										
SB 211-33	2-1/16	3.9370	1.7835	0.8268	0.465	1.319	**3/8-24 UNF**	0.386	33370	25110	1.1
SB 211-34	2-1/8										
SB 211-35	2-3/16										
SB 212	60	110	53.7	22	14.9	38.8	**M10 x 1**	9.8			
SB 212-36	2-1/4										
SB 212-37	2-5/16	4.3307	2.1142	0.8661	0.587	1.528	**3/8-24 UNF**	0.386	36740	27970	1.30
SB 212-38	2-3/8										
SB 212-39	2-7/16										

Bearings And Housings Matching Table

Housing \ Bearing		UC	UK	NA	SA	SB
	P	UCP	UKP	NAP	SAP	SBP
	F	UCF	UKF	NAF	SAF	SBF
	FL	UCFL	UKFL	NAFL	SAFL	SBFL
	T	UCT	UKT	NAT	SAT	SBT
	FC	UCFC	UKFC	NAFC	SAFC	SBFC
	PH	UCPH	UKPH	NAPH	SAPH	SBPH
	PA	UCPA	UKPA	NAPA	SAPA	SBPA
	HA	UCHA	UKHA	NAHA		
	FB	UCFB	UKFB	NAFB		
	FA	UCFA	UKFA	NAFA		
	C	UCC	UKC	NAC	SAC	SBC
	LP				SALP	SBLP
	FL				SALF	SBLF
	PP				SAPP	SBPP
	PF				SAPF	SBPF
	PFL				SAPFL	SBPFL

Notes

9. BASIC STRUCTURE OF FBJ

PLUMMER BLOCK HOUSINGS

STRUCTURE OF PLUMMER BLOCK HOUSINGS

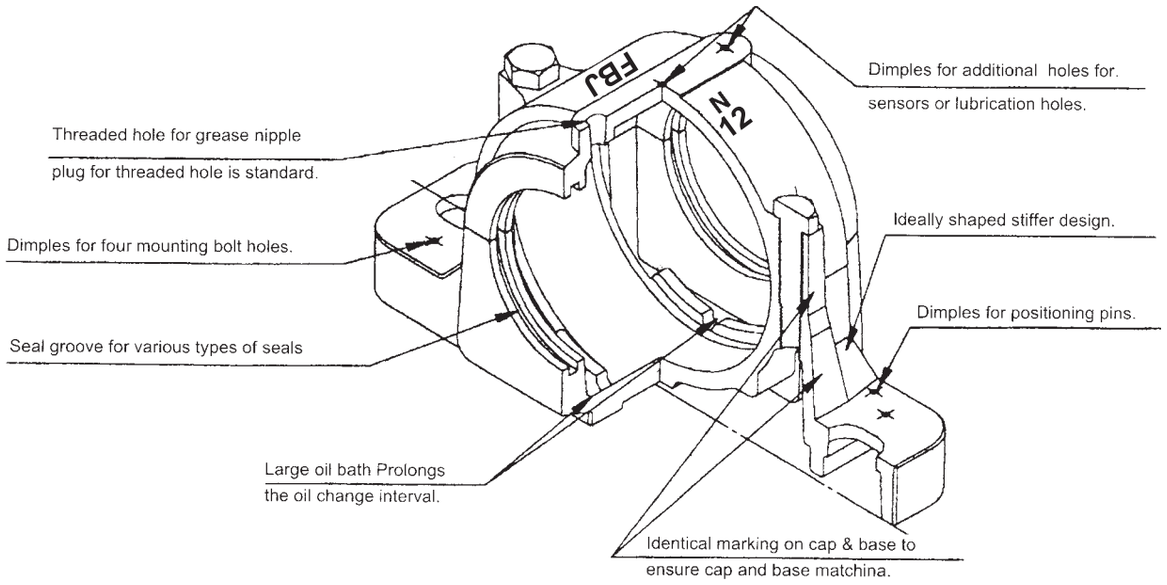

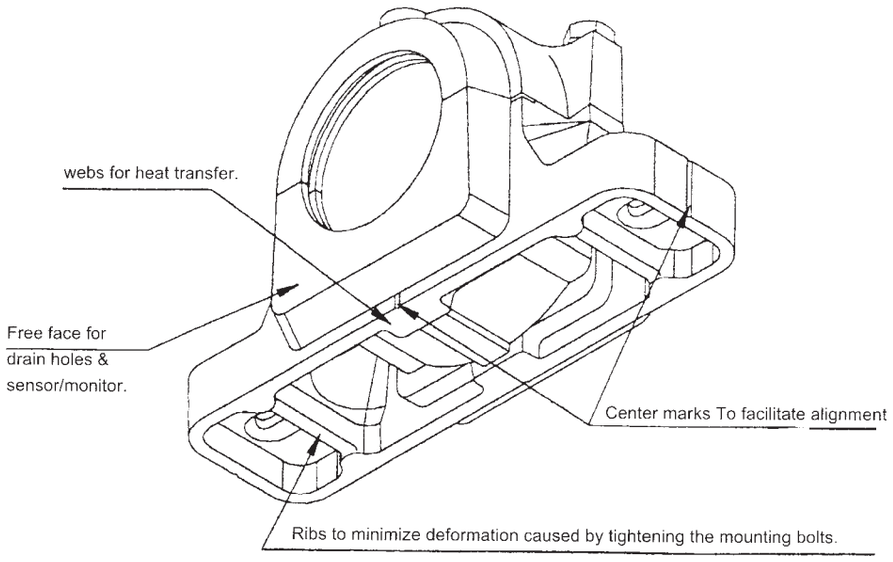

10. MATERIALS AND MACHINING TOLERANCES

Plummer Block Housings are cast and produced in accordance with ISO/R113-1994 standard. (B.S. 1642: 969 standard, JIS B 1551 - 1968 standard) The following tables show materials and relative machining tolerance covering the housings and its accessories.

10.1 HOUSING

MATERIAL	JIS		TENSILE STRENGTH kgf/mm^2
	SYMBOL	SYMBOL	
GREY CAST IRON	FC 200	G 5501	20

10.2 ACCESSORIES

NAME	PART NO.	MATERIALS
FELT STRIP	FS	60%-80% WOOL,20%RAYON,DENSITY 0.25g/cm2
LOCATING RING	SR	MILD STEEL STRIP AISI 1010/ALUMINUM
HEXAGON BOLT	M	MILD STEEL AISI 1010
ZF SEAL	ZF	NBR
END COVER	500NA	NBR & MILD STEEL PLATE
END PLATE	P	MILD STEEL PLATE
END COVER	TSA	CAST IRON
END PLUG	EPR	NBR & MILD STEEL

Different types of sealins arrangements can be supplied on request.

10.3 MACHINING TOLERANCE:

10.3.1 HOUSINGS BORE. (0.001mm)

BORE mm	G7	H7	H8	J7
10 - 18	+ 24 + 6	+ 18 - 0	+ 27 - 0	+ 10 - 8
18 - 30	+ 28 + 7	+ 21 - 0	+ 33 - 0	+ 12 - 9
30 - 50	+ 34 + 9	+ 25 - 0	+ 39 - 0	+ 14 - 11
50 - 80	+ 40 + 10	+ 30 - 0	+ 46 - 0	+ 18 - 12
80 - 120	+ 42 + 12	+ 35 - 0	+ 54 - 0	+ 22 - 13
120 - 180	+ 54 + 14	+ 40 - 0	+ 63 - 0	+ 26 - 14
180 - 250	+ 61 + 15	+ 46 - 0	+ 72 - 0	+ 30 - 16
250 - 315	+ 69 + 17	+ 52 - 0	+ 82 - 0	+ 36 - 16
315 - 400	+ 75 + 18	+ 57 - 0	+ 89 - 0	+ 39 - 18
400 - 500	+ 83 + 20	+ 63 - 0	+ 97 - 0	+ 43 - 20
500 - 620	+ 92 + 23	+ 69 - 0	+ 104 - 0	+ 46 - 23

10.3.2 EXCEPT HOUSINGS BORE (0.001mm)

DIMENSION mm	H10	H11	H12	H13	h13
10 - 18	+ 70 - 0	+ 110 - 0	+ 180 - 0	+ 270 - 0	+ 0 - 270
18 - 30	+ 84 - 0	+ 130 - 0	+ 210 - 0	+ 330 - 0	+ 0 - 330
30 - 50	+ 100 - 0	+ 160 - 0	+ 250 - 0	+ 390 - 0	+ 0 - 390
50 - 80	+ 120 - 0	+ 190 - 0	+ 300 - 0	+ 460 - 0	+ 0 - 460
80 - 120	+ 140 - 0	+ 220 - 0	+ 350 - 0	+ 540 - 0	+ 0 - 540
120 - 180	+ 160 - 0	+ 250 - 0	+ 400 - 0	+ 630 - 0	+ 0 - 630
180 - 250	+ 185 - 0	+ 290 - 0	+ 460 - 0	+ 720 - 0	+ 0 - 720
250 - 315	+ 210 - 0	+ 320 - 0	+ 520 - 0	+ 810 - 0	+ 0 - 810
315 - 400	+ 230 - 0	+ 360 - 0	+ 570 - 0	+ 890 - 0	+ 0 - 890

10.4 SELECTION OF BEARING HOUSING TOLERANCES

Conditions		Examples	Tolerance symbol according to JIS
Indeterminate load direction	Normal and light loads, Axial displacement of the outer ring desirable	Electrical motors, Pumps Crankshaft main bearings	J7
	Shock loads, Temporary complete unloading	Journal boxes for rail vehicles	
Fixed outer ring load	All loads	Bearing applications in general, Journal boxes for rail vehicles	H7
	Normal and light loads, Load under	Line shaftings	H8
	Heat suppplide through the shaft	Dryer cylinders	G7

FBJ®

Plummer Block

SN-SSN 500 Series

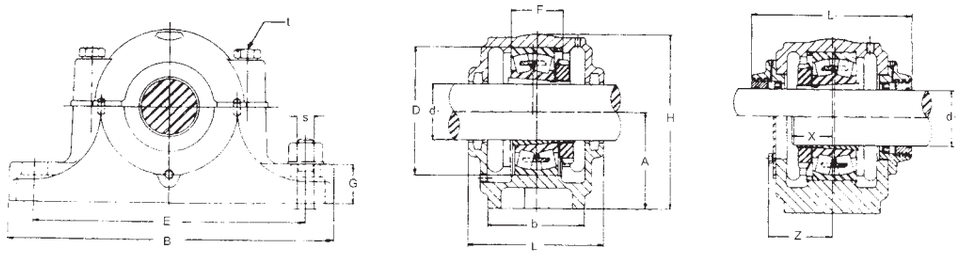

NOMINAL DIMENSIONS (mm)																
HOUSING NO.	SHAFT DIA. d1 METRIC	SHAFT DIA. d1 INCH	D H8	B	b	G	F H13	A h13	L	H	E	E1	L1	X	Z	d2H12 METRIC
SN 505	20	3/4	52	165	46	22	25	40	67	75	130	25	-	22	-	21.5
SN 506	25	1	62	185	52	22	30	50	77	90	150	25		22		26.5
SN 507	30	1-1/8	72	185	52	22	33	50	82	95	150	25	-	24	-	31.5
SN 508	35	1-1/4	80	205	60	25	33	60	85	110	170	30	-	26	-	36.5
SN 509 SSN	40	1-1/2	85	205	60	25	31	60	85	112	170	30	-	28	-	41.5
SN 510 SSN	45	1-3/4	90	205	60	25	33	60	90	115	170	30	-	28	-	46.5
SN 511 SSN	50	2	100	255	70	28	33	70	95	130	210	35	160	30	54	51.5
SN 512 SSN	55	2-1/8	110	255	70	30	38	70	105	135	210	35	172	32	62	56.5
SN 513 SSN	60	2-1/4	120	275	80	30	43	80	110	150	230	40	172	36	62	62
SN 515 SSN	65	2-1/2	130	280	80	30	41	80	115	155	230	40	182	38	68	67
SN 516 SSN	70	2-3/4	140	315	90	32	43	95	120	175	260	50	184	40	68	72
SN 517 SSN	75	3	150	320	90	32	46	95	125	185	260	50	184	42	70	77
SN 518 SSN	80	3-1/4	160	345	100	35	62.4	100	145	195	290	50	204	50	81	82
SN 519 SSN	85	-	170	345	100	35	53	112	140	210	290	50	-	-	-	87
SN 520 SSN	90	3-1/2	180	380	110	40	70.3	112	160	218	320	60	224	54	90	92
SN 522 SSN	100	4	200	410	120	45	80	125	175	240	350	70	232	60	92	102
SN 524 SSN	110	4-1/4	215	410	120	45	86	140	185	270	350	70	248	64	95	113
SN 526 SSN	115	4-1/2	230	445	130	50	90	150	190	290	380	70	268	64	100	118
SN 528 SSN	125	5	250	500	150	50	98	150	205	305	420	80	286	70	108	128
SN 530 SSN	135	5-1/4	270	530	160	60	106	160	220	325	450	90	304	76	113	138
SN 532 SSN	140	5-1/2	290	550	160	60	114	170	235	345	470	90	320	80	122	143

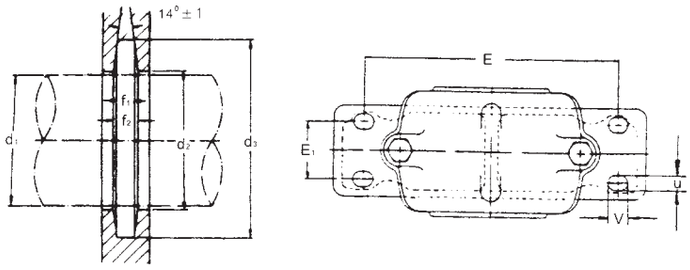

										BEARING NO.		ADAPTER SLEEVE		LOCATING RING	
d3	t	f1	f2	u	v	S		WEIGHT (kg)		SELF-ALIG	SPHERICAL	METRIC	INCH	NUMBER	QTY
H12		H13	H8			2 bolt	4 bolt	SN5	SSN5	BALL	ROLLER				
31	M8	3	4.2	15	20	M12	M8	1.5	2.3	1205K 2205K	- 22205K	H205 H305	HE205 HE305	52X7 52X7	2 1
38	M8	4	5.4	15	20	M12	M10	1.74	2.8	1206K 2206K	- 22206K	H206 H606	HE206 HE606	62X7 62X10	2 1
43	M10	4	5.4	15	20	M12	M10	1.9	3.2	12067K 22207K	- 22207K	H207 H307	HS207 HS307	72X8 72X10	 1
48	M10	4	5.4	15	20	M12	M10	2.63	3.2	1208K 2208K	- 22208K	H208 H308	HE208 HE308	80X7.5 80X10	2 1
53	M10	4	5.4	15	20	M12	M10	2.64	3.7	1209K 2209K	- 22209K	H209 H309	HE209 HE309	85X6 85X8	2 1
58	M10	4	5.4	15	20	M12	M10	2.80	3.8	1210K 2210K	- 22210K	H210 H310	HE210 HE310	90X6.5 90X10	2 1
67	M12	5	6.9	18	23	M16	M12	4.32	6.2	1211K 2211K	- 22211K	H211 H311	HE211 HE311	100X6 100X8	2 1
72	M12	5	6.9	18	23	M16	M12	4.99	6.5	1212K 2212K	- 22212K	H212 H312	HS212 HS312	110X8 110X10	2 1
77	M12	5	6.8	18	23	M16	M12	5.64	8.3	1213K 2213K	- 22213K	H213 H313	HE213 HE313	120X10 120X12	2 1
82	M12	5	6.8	18	23	M16	M12	6.19	9.0	1215K 2215K	- 22215K	H215 H315	HE215 HE315	130X8 130X10	2 1
89	M16	6	8.1	22	27	M20	M12	8.17	12.1	1216K 2216K	- 22216K	H216 H316	HE216 HE316	140X8.5 140X10	2 1
94	M16	6	8.1	22	27	M20	M12	9.37	12.2	1217K 2217K	- 22217K	H217 H317	HE217 HE317	150X9 150X10	2 1
99	M16	6	8.1	22	27	M20	M16	11.5	15.2	1218K 2218K	- 22218K 23218K	H218 H318 H2318	HE218 HE318 HE2318	160X716.2 160X11.2 160X10	2 2- 1
104	M16	6	8.1	22	28	M20	M16	13.5	17.7	1219K -	- 22219K	H219 H319		170X10.5 170X10	2 1
111	M20	7	9.3	26	32	M24	M16	16.3	20.5	2220K -	22220K 23220K	H320 H2320	HE320 HE2320	180X12.1 180X10	2 1
125	M20	8	10.8	26	32	M24	M16	25.1	29.2	2222K -	22222K 23222K	H322 H2322	HE322 HE2322	200X13.5 200X10	2 1
135	M20	8	10.7	26	34	M24	M16	27.2	33	- -	22224K 23224K	H3124 H2324	HE3124 HE2324	215X14 215X10	2 1
140	M24	8	10.7	28	35	M24	M20	35.2	40.9	- -	22226K 23226K	H3126 H2326	HE3126 HE2326	230X13 230X10	2 1
154	M24	9	12.2	34	44	M30	M24	43.7	48.6	- -	22228K 23228K	H3128 H2328	HE3128 HE2328	250X15 250X10	2 1
164	M24	9	12.2	34	42	M30	M24	45.3	56.2	- -	22230K 23230K	H3130 H2330	HE3130 HE2330	270X16.5 270X10	2 1
173	M24	10	13.7	32	44	M30	M24	50.75	68.5	- -	22232K 23232K	H3132 H2332	HE3132 HE2332	290X17 290X10	2 1

NOTES:
Foot of standard housing SSN type is solid without mounting holes or can be precast as 2-bolt (with prefix T) or 4-bolt mounting holes (with prefix F).
Taconite seal will be supplied as optional for perfect arrangement in severe operating conditions to prevent contamination from fine abrasive dust.
ZF rubber seals can be supplied upon request.

FBJ®

Plummer Block

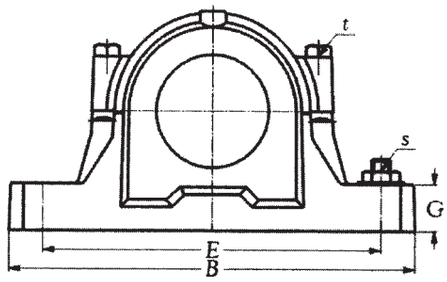

SNU 500~600 Series

HOUSING SIZE	SHAFT DIAMETER d(mm)	PLUMMER BLOCK HOUSING	PLUMMER BLOCK HOUSING DIMENSIONS (mm)										
			D (H8)	B	b	G	F (H13)	A (h13)	L	H	E	d_2 (H12)	d_3 (H13)
SNU 505	20	**SNU 505**	52	165	46	19	25	40	67	73	130	31.5	39.5
SNU 605	20	**SNU 506-605**	62	185	52	22	32	50	77	88	150	36.5	44.5
SNU 506	25	**SNU 506-605**	62	185	52	22	32	50	77	88	150	36.5	44.5
SNU 606	25	**SNU 507-606**	72	185	52	22	34	50	82	93	150	46.5	54.5
SNU 507	30	**SNU 507-606**	72	185	52	22	34	50	82	93	150	46.5	54.5
SNU 607	30	**SNU 508-607**	80	205	60	25	39	60	85	107	170	51.5	59.5
SNU 508	35	**SNU 508-607**	80	205	60	25	39	60	85	107	170	51.5	59.5
SNU 608	35	**SNU 510-608**	90	205	60	25	41	60	90	112	170	62.0	70.5
SNU 509	40	**SNU 509**	85	205	60	25	30	60	85	109	170	56.5	64.5
SNU 609	40	**SNU 511-609**	100	255	70	28	44	70	95	127	210	67.0	75.5
SNU 510	45	**SNU 510-608**	90	205	60	25	41	60	90	112	170	62.0	70.5
SNU 610	45	**SNU 512-610**	110	255	70	30	48	70	105	133	210	72.0	80.5
SNU 511	50	**SNU 511-609**	100	255	70	28	44	70	95	127	210	67.0	75.5
SNU 611	50	**SNU 513-611**	120	275	80	30	51	80	110	148	230	77.0	85.5
2NU 512	55	**SNU 512-610**	110	255	70	30	48	70	105	133	210	72.0	80.5
SNU 612	55	**SNU 515-612**	130	280	80	30	56	80	115	154	230	87.0	95.5
SNU 513	60	**SNU 513-611**	120	275	80	30	51	80	110	148	230	77.0	85.5
2NU 613	60	**SNU 516-613**	140	315	90	32	58	95	120	175	260	92.0	101.0
SNU 515	65	**SNU 515-612**	130	280	80	30	56	80	115	154	230	87.0	95.5
SNU 615	65	**SNU 518-615**	160	345	100	35	65	100	140	191	290	102.5	111.0

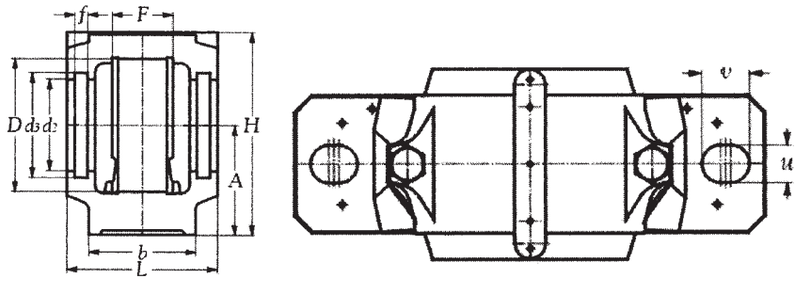

PLUMMER BLOCK HOUSING DIMENSIONS (mm)						APPROPRIATE APARTMENT					
f	u	v	s	t	WEIGHT Kg	BEARING NUMBER	ADAPTER SLEEVE	LOCATING RING NUMBER	LOCATING RING QTY	SEAL NUMBER	END COVER
5	15	20	M12	M8	1.4	**1205 K** **2205 K** **22205 K**	H205 H305	SR 52X5 SR 52X7	2 1	U 505	505 UA
5	15	20	M12	M8	1.9	**1305 K** **2305 K**	H305 H2305	SR 62X7.5 SR 62X8	2 1	U 605	506 UA
5	15	20	M12	M8	1.9	**1206 K** **2206 K** **22206 K**	H206 H306	SR 62X8 SR 62X6	2 2	U 506	506 UA
5	15	20	M12	M10	2.0	**1306 K** **2306 K**	H306 H2306	SR 72X7.5 SR 72X7	2 1	U 606	507 UA
5	15	20	M12	M10	2.0	**1207 K** **2207 K** **22207 K**	H207 H307	SR 72X8.5 SR 72X5.5	2 2	U 507	507 UA
5	15	20	M12	M10	2.7	**1307 K** **2307 K**	H307 H2307	SR 80X9 SR 80X8	2 1	U 607	508 UA
5	15	20	M12	M10	2.7	**1208 K** **2208 K** **22208 K**	H208 H308	SR 80X1.5 SR 80X8	2 2	U 508	508 UA
5	15	20	M12	M10	2.9	**1308 K** **21308 K** **2308 K** **22308 K**	H308 H2308	SR 90X9 SR 90X8	2 1	U 608	511 NA-510 UA
5	15	20	M12	M10	2.8	**1209 K** **2209 K** **22209 K**	H209 H309	SR 85X5.5 SR 85X7	2 1	U 509	509 UA
5	18	24	M16	M12	4.5	**1309 K** **21309 K** **2309 K** **22309 K**	H309 H2309	SR 100X9.5 SR 100X8	2 1	U 609	512 NA-511 UA
5	15	20	M12	M10	2.9	**1210 K** **2210 K** **22210 K**	H210 H310	SR 90X10.5 SR 90X9	2 2	U 510	511 NA-510 UA
5	18	24	M16	M12	5.0	**1310 K** **21310 K** **2310 K** **22310 K**	H310 H2310	SR 110X10.5 SR 110X8	2 1	U 610	513 NA-512 UA
5	18	24	M16	M12	4.5	**1211 K** **2211 K** **22211 K**	H211 H311	SR 100X11.5 SR 100X9.5	2 2	U 511	512 NA-511 UA
5	18	24	M16	M12	6.3	**1311 K** **21311 K** **2311 K** **22311 K**	H311 H2311	SR 120X11 SR 120X8	2 1	U 611	515 NA-513 UA
5	18	24	M16	M12	5.0	**1212 K** **2212 K** **22212 K**	H212 H312	SR 110X13 SR 110X10	2 2	U 512	513 NA-512 UA
5	18	24	M16	M12	6.6	**1312 K** **21312 K** **2312 K** **22312 K**	H312 H2312	SR 130X12.5 SR 130X10	2 1	U 612	517 NA-515 UA
5	18	24	M16	M12	6.3	**1213 K** **2213 K** **22213 K**	H213 H313	SR 120X14 SR 120X10	2 2	U 513	515 NA-513 UA
5	22	28	M20	M16	9.4	**1313 K** **21313 K** **2313 K** **22313 K**	H313 H2313	SR 140X12.5 SR 140X10	2 1	U 613	518 NA-516 UA
5	18	24	M16	M12	6.6	**1215 K** **2215 K** **22215 K**	H215 H315	SR 130X15.5 SR 130X12.5	2 2	U 515	517 NA-515 UA
5	22	28	M20	M16	12.3	**1315 K** **21315 K** **2315 K** **22315 K**	H315 H2315	SR 160X14 SR 160X10	2 1	U 615	520 NA-518 UA

FBJ®

Plummer Block

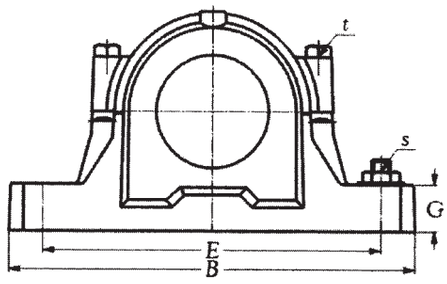

SNU 500~600 Series

HOUSING SIZE	SHAFT DIAMETER d(mm)	PLUMMER BLOCK HOUSING	PLUMMER BLOCK HOUSING DIMENSIONS (mm)										
			D (H8)	B	b	G	F (H13)	A (h13)	L	H	E	d_2 (H12)	d_3 (H13)
SNU 516	70	**SNU 516-613**	140	315	90	32	58	95	120	175	260	92.5	101.0
SNU 616	70	**SNU 519-616**	170	345	100	35	68	112	145	208	290	131.0	141.0
SNU 517	75	**SNU 517**	150	320	90	32	61	95	125	181	260	97.5	106.0
SNU 617	75	**SNU 520-617**	180	380	110	40	70	112	160	214	320	137.5	147.5
SNU 518	80	**SNU 518-615**	160	345	100	35	65	100	140	191	290	102.5	111.0
SNU 519	85	**SNU 519-616**	170	345	100	35	68	112	145	208	290	131.0	141.0
SNU 619	85	**SNU 522-619**	200	410	120	45	80	125	175	237	350	147.5	157.5
SNU 520	90	**SNU 520-617**	180	380	110	40	70	112	160	214	320	137.5	147.5
SNU 620	90	**SNU 524-620**	215	410	120	45	86	140	185	271	350	157.5	167.5
SNU 522	100	**SNU 522-619**	200	410	120	45	80	125	175	237	350	147.5	157.5
SNU 524	110	**SNU 524-620**	215	410	120	45	86	140	185	271	350	157.5	167.5
SNU 526	115	**SNU 526**	230	445	130	50	90	150	190	290	380	167.5	177.5
SNU 528	125	**SNU 528**	250	500	150	50	98	150	205	302	420	177.5	187.5
SNU 530	135	**SNU 530**	270	530	160	60	106	160	220	323	450	192.5	202.5
SNU 532	140	**SNU 532**	290	550	160	60	114	170	235	344	470	202.5	212.5

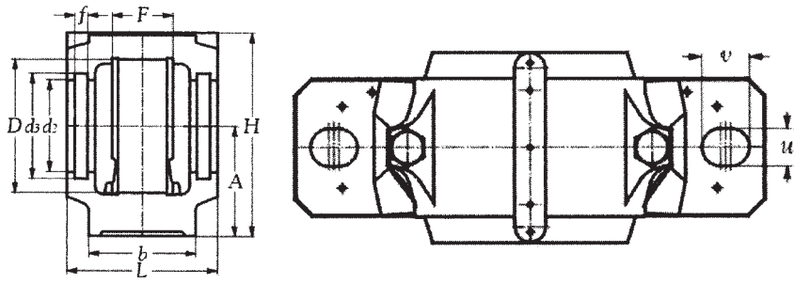

PLUMMER BLOCK HOUSING DIMENSIONS (mm)						APPROPRIATE APARTMENT					
f	u	v	s	t	WEIGHT Kg	BEARING NUMBER	ADAPTER SLEEVE	LOCATING RING NUMBER	LOCATING RING QTY	SEAL NUMBER	END COVER
5	22	28	M20	M16	9.4	**1216 K** **2216 K** **22216 K**	H216 H316	SR 140X16 SR 140X12.5	2 2	U 516	518 NA-516 UA
6	22	28	M20	M16	13.5	**1316 K** **21316 K** **2316 K** **22316 K**	H316 H2316	SR 170X14.5 SR 170X10	2 1	U 616	526 NA-519 UA
5	22	28	M20	M16	9.8	**1217 K** **2217 K** **22217 K**	H217 H317	SR 150X16.5 SR 150X12.5	2 2	U 517	519 NA-517 UA
6	26	32	M24	M20	16.6	**1317 K** **21317 K** **2317 K** **22317 K**	H317 H2317	SR 180X14.5 SR 180X10	2 1	U 617	520 UA
5	22	28	M20	M16	12.3	**1218 K** **2218 K** **22218 K** **23218 K**	H218 H318 H2318	SR 160X17.5 SR 160X12.5 SR 160X12.5	2 2 1	U 518	520 NA-518 UA
6	22	28	M20	M16	13.5	**1219 K** **2219 K** **22219 K**	H219 H319	SR 170X18 SR 170X12.5	2 2	U 519	526 NA-519 UA
6	26	32	M24	M20	20.4	**1319 K** **21319 K** **2319 K** **22319 K**	H319 H2319	SR 200X17.5 SR 200X13	2 1	U 619	528 NA-522 UA
6	26	32	M24	M20	16.6	**1220 K** **2220 K** **22220 K** **23220 K**	H220 H320 H2320	SR 180X18 SR 180X12 SR 180X9.7	2 2 1	U 520	520 UA
6	26	32	M24	M20	25.0	**1320 K** **21320 K** **2320 K** **22320 K**	H320 H2320	SR 215X19.5 SR 215X13	2 1	U 620	530 NA-524 UA
6	26	32	M24	M20	20.4	**1222 K** **2222 K** **22222 K** **23222 K**	H222 H322 H2322	SR 200X21 SR 200X13.5 SR 200X10.2	2 2 1	U 522	528 NA-522 UA
6	26	32	M24	M20	25.0	**22224 K** **23224 K**	H3124 H2324	SR 215X14 SR 215X10	2 1	U 524	530 NA-524 UA
6	28	35	M24	M24	29.8	**22226 K** **23226 K**	H3126 H2326	SR 230X13 SR 230X10	2 1	U 526	532 NA-526 UA
6	35	42	M30	M24	37.5	**22228 K** **23228 K**	H3128 H2328	SR 250X15 SR 250X10	2 1	U 528	528 UA
6	35	42	M30	M24	46.0	**22230 K** **23230 K**	H3130 H2330	SR 270X16.5 SR 270X10	2 1	U 530	530 UA
6	35	42	M30	M24	51.0	**22232 K** **23232 K**	H3132 H2332	SR 290X17 SR 190X10	2 1	U 532	532 UA

FBJ®

Adapter Sleeves With Lock Nuts and Lock Washer

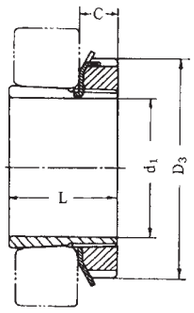

H 200 / HE 200 Series
HS 200 / HA 200 Series

Adapter Sleeve Number				Dimensions							Weight (kg)
				d_1				L	D_3	C	
H	HE	HS	HA	H mm	HEin	HSin	HAin	mm	mm	mm	
H 205	HE 205	–	–	20	$^3/_4$	–	–	26	38	8	0.070
H 206	06	–	HA 206	25	1	–	$^{15}/_{16}$	27	45	8	0.099
H 207	–	HS 207	07	30	–	$1^1/_8$	$1^3/_{16}$	29	52	9	0.125
H 208	HE 208	HS 208	–	35	$1^1/_4$	$1^3/_8$	–	31	58	10	0.174
H 209	09	09	HA 209	40	$1^1/_2$	$1^5/_8$	$1^7/_{16}$	33	65	11	0.226
H 210	10	–	10	45	$1^3/_4$	–	$1^{11}/_{16}$	35	70	12	0.274
H 211	HE 211	HS 211	HA 211	50	2	$1^7/_8$	$1^{15}/_{16}$	37	75	12	0.308
H 212	–	12	–	55	–	$2^1/_8$	–	38	80	13	0.346
H 213	13	13	13	60	$2^1/_4$	$2^3/_8$	$2^3/_{16}$	40	85	14	0.401
H 214	–	–	–	60	–	–	–	41	92	14	0.550
H 215	HE 215	HS 215	HA 215	65	$2^1/_2$	$2^5/_8$	$2^7/_{16}$	43	98	15	0.708
H 216	16	–	16	70	$2^3/_4$	–	$2^{11}/_{16}$	46	105	17	0.881
H 217	HE 217	HE 217	HE 217	75	3	$2^7/_8$	$2^{15}/_{16}$	50	110	18	1.02
H 218	–	18	–	80	–	$3^1/_8$	–	52	120	18	1.18
H 219	19	–	–	85	$3^1/_4$	–	–	55	125	19	1.37
H 220	HE 220	–	–	90	$3^1/_2$	–	–	58	130	20	1.49
H 221	–	–	–	95	–	–	–	60	140	20	1.70
H 222	22	–	–	100	4	–	–	63	145	21	1.93

H 300 / HE 300 Series
HS 300 / HA 300 Series

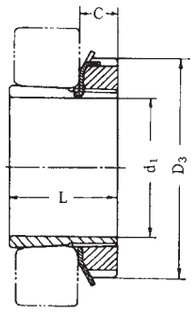

Adapter Sleeves

Adapter Sleeve Number				Dimensions							Weight (kg)
				d_1				L	D_3	C	
H	HE	HS	HA	H mm	HEin	HSin	HAin	mm	mm	mm	
H 305	HE 305	–	–	20	$^3/_4$	–	–	29	38	8	0.075
H 306	06	–	HA 306	25	1	–	$^{15}/_{16}$	31	45	8	0.109
H 307	–	HS 307	07	30	–	$1^1/_8$	$1^3/_{16}$	35	52	9	0.142
H 308	HE 308	HS 308	–	35	$1^1/_4$	$1^3/_8$	–	36	58	10	0.189
H 309	09	09	HA 309	40	$1^1/_2$	$1^5/_8$	$1^7/_{16}$	39	65	11	0.248
H 310	10	–	10	45	$1^3/_4$	–	$1^{11}/_{16}$	42	70	12	0.302
H 311	HE 311	HS 311	HA 311	50	2	$1^7/_8$	$1^{15}/_{16}$	45	75	12	0.345
H 312	–	12	–	55	–	$2^1/_8$	–	47	80	13	0.393
H 313	13	13	13	60	$2^1/_4$	$2^3/_8$	$2^3/_{16}$	50	85	14	0.459
H 314	–	–	–	60	–	–	–	52	92	14	0.723
H 315	HE 315	HS 315	HA 315	65	$2^1/_2$	$2^5/_8$	$2^7/_{16}$	55	98	15	0.830
H 316	16	–	16	70	$2^3/_4$	–	$2^{11}/_{16}$	59	105	17	1.03
H 317	HE 317	HE 317	HE 317	75	3	$2^7/_8$	$2^{15}/_{16}$	63	110	18	1.18
H 318	–	18	–	80	–	$3^1/_8$	–	65	120	18	1.37
H 319	19	–	–	85	$3^1/_4$	–	–	68	125	19	1.56
H 320	HE 320	–	–	90	$3^1/_2$	–	–	71	130	20	1.69
H 321	–	–	–	95	–	–	–	74	140	20	1.93
H 322	22	–	–	100	4	–	–	77	145	21	2.18

FBJ®

Adapter Sleeves

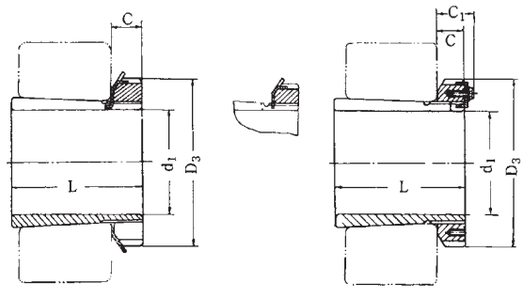

With Lock Washer With Lock Plate

H 2300 / HE 2300 Series
HS 2300 / HA 2300 Series

Adapter Sleeve Number				Dimensions								Weight (kg)
				d_1				L mm	D_3 mm	C mm	C_1 mm	
H	HE	HS	HA	H mm	HEin	HSin	HAin					
H 2305	HE 2305	–	–	20	$^3/_4$	–	–	35	38	8	–	0.087
H 2306	06	–	HA 2306	25	1	–	$^{15}/_{16}$	38	45	8	–	0.126
H 2307	–	HS 2307	07	30	–	$1^1/_8$	$1^3/_{16}$	43	52	9	–	0.165
H 2308	HE 2308	HS 2308	–	35	$1^1/_4$	$1^3/_8$	–	46	58	10	–	0.224
H 2309	09	09	HA 2309	40	$1^1/_2$	$1^5/_8$	$1^7/_{16}$	50	65	11	–	0.280
H 2310	10	–	10	45	$1^3/_4$	–	$1^{11}/_{16}$	55	70	12	–	0.362
H 2311	HE 2311	HS 2311	HA 2311	50	2	$1^7/_8$	$1^{15}/_{16}$	59	75	12	–	0.420
H 2312	–	12	–	55	–	$2^1/_8$	–	62	80	13	–	0.480
H 2313	13	13	13	60	$2^1/_4$	$2^3/_8$	$2^3/_{16}$	65	85	14	–	0.556
H 2314	–	–	–	60	–	–	–	68	92	14	–	0.897
H 2315	HE 2315	HS 2315	HA 2315	65	$2^1/_2$	$2^5/_8$	$2^7/_{16}$	73	98	15	–	1.05
H 2316	16	–	16	70	$2^3/_4$	–	$2^{11}/_{16}$	78	105	17	–	1.28
H 2317	HE 2317	HE 2317	HE 2317	75	3	$2^7/_8$	$2^{15}/_{16}$	82	110	18	–	1.45
H 2318	–	18	–	80	–	$3^1/_8$	–	86	120	18	–	1.70
H 2319	19	–	–	85	$3^1/_4$	–	–	90	125	19	–	1.94
H 2320	HE 2320	–	–	90	$3^1/_2$	–	–	97	130	20	–	2.15
H 2322	22	–	–	100	4	–	–	105	145	21	–	2.74
H 2324	HE 2324	–	–	110	$4^1/_4$	–	–	112	155	22	–	3.20
H 2326	26	–	–	115	$4^1/_2$	–	–	121	165	23	–	4.60
H 2328	28	–	–	125	5	–	–	131	180	24	–	5.52
H 2330	HE 2330	–	–	135	$5^1/_4$	–	–	139	195	26	–	6.60
H 2332	32	–	–	140	$5^1/_2$	–	–	147	210	28	–	9.15
H 2332	34	–	–	150	6	–	–	154	220	29	–	10.4
H 2336	HE 2336	–	–	160	$6^1/_2$	–	–	161	230	30	–	11.3
H 2338	38	–	–	170	$6^3/_4$	–	–	169	240	31	–	12.6
H 2340	40	–	–	180	7	–	–	176	250	32	–	13.9
H 2344	–	–	–	200	–	–	–	183	280	32	44	16.6
H 2348	–	–	–	220	–	–	–	196	300	34	46	19.7
H 2352	–	–	–	240	–	–	–	208	330	36	49	24.2
H 2356	–	–	–	260	–	–	–	221	350	38	51	27.8

H 3000 / HE 3000 Series

Adapter Sleeves

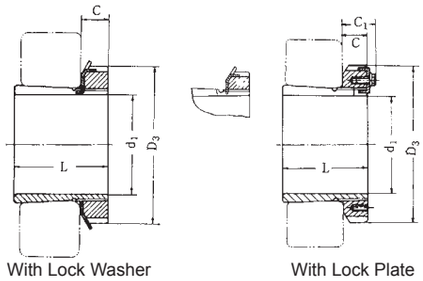

With Lock Washer With Lock Plate

Adapter Sleeve Number		Dimensions						Weight (kg)
		d_1		L	D_3	C	C_1	
H	HE	H mm	HEin	mm	mm	mm	mm	
H 3024	HE 3024	110	$4^1/_4$	72	145	22	–	1.96
H 3026	HE 26	115	$4^1/_2$	80	155	23	–	2.85
H 3028	HE 28	125	5	82	165	24	–	3.18
H 3030	HE 3030	135	$5^1/_4$	87	180	26	–	3.90
H 3032	HE 32	140	$5^1/_2$	93	190	28	–	5.20
H 3034	HE 34	150	6	101	200	29	–	6.00
H 3036	HE 3036	160	$6^1/_2$	109	210	30	–	6.85
H 3038	38	170	$6^3/_4$	112	220	31	–	7.45
H 3040	40	180	7	120	240	32	–	9.20
H 3044	–	200	–	128	260	30	41	10.3
H 3048	–	220	–	133	290	34	46	13.4
H 3052	–	240	–	147	300	34	46	15.6
H 3056	–	260	–	152	330	38	50	17.7
H 3060	–	280	–	168	360	42	54	22.8
H 3064	–	300	–	171	380	42	55	24.6
H 3068	–	320	–	187	400	45	58	28.6
H 3072	–	340	–	188	420	45	58	30.6
H 3076	–	360	–	193	450	48	62	35.8
H 3080	–	380	–	210	470	52	66	41.5
H 3084	–	400	–	212	490	52	66	43.6
H 3088	–	410	–	228	520	60	77	65.5
H 3092	–	430	–	234	540	60	77	69.4
H 3096	–	450	–	237	560	60	77	73.5
H 30/500	–	470	–	247	580	68	85	82.0

FBJ®

Adapter Sleeves

H 3100 / HE 3100 Series

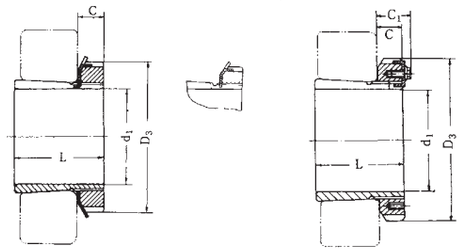

With Lock Washer With Lock Plate

Adapter Sleeve Number		Dimensions						Weight (kg)
		d_1		L	D_3	C	C_1	
H	HE	H mm	HEin	mm	mm	mm	mm	
H 3122	HE 3122	100	4	81	145	21	–	2.25
H 3124	24	110	$4^1/_4$	88	155	22	–	2.64
H 3126	26	115	$4^1/_2$	92	165	23	–	3.66
H 3128	HE 3128	125	5	97	180	24	–	4.34
H 3130	30	135	$5^1/_4$	111	195	26	–	5.54
H 3132	32	140	$5^1/_2$	119	210	28	–	7.70
H 3134	HE 3134	150	6	122	220	29	–	8.40
H 3136	36	160	$6^1/_2$	131	230	30	–	9.50
H 3138	38	170	$6^3/_4$	141	240	31	–	10.8
H 3140	HE 3140	180	7	150	250	32	–	12.1
H 3144	–	200	–	158	280	32	44	14.7
H 3148	–	220	–	169	300	34	46	17.3
H 3152	–	240	–	187	330	36	49	22.0
H 3156	–	260	–	192	350	38	51	24.5
H 3160	–	280	–	208	380	40	53	30.3
H 3164	–	300	–	226	400	42	56	35.0
H 3168	–	320	–	254	440	55	72	49.5
H 3172	–	340	–	259	460	58	75	54.5
H 3176	–	360	–	264	490	60	77	61.6
H 3180	–	380	–	272	520	62	82	70.8
H 3184	–	400	–	304	540	70	90	84.5
H 3188	–	410	–	307	560	70	90	108.0
H 3192	–	430	–	326	580	75	95	116.0
H 3196	–	450	–	335	620	75	95	133.0
H 31/500	–	470	–	356	630	80	100	146.0

Adapter Sleeves

H 3200 Series

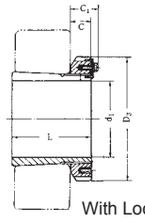

With Lock Plate

Adapter Sleeve Number	Dimensions (mm)					
	d_1	L	D_3	C	C_1	Weight (kg)
H 3260	280	240	380	40	53	34.0
H 3264	300	258	400	42	56	39.4
H 3268	320	288	440	55	72	54.6
H 3272	340	299	460	58	75	60.2
H 3276	360	310	490	60	77	69.6
H 3280	380	328	520	62	82	81.0
H 3284	400	352	540	70	90	94.0
H 3288	410	361	560	70	90	118.0
H 3292	430	382	580	75	95	132.0
H 3296	450	397	620	75	95	152.0
H 32/500	470	428	630	80	100	166.0

AN, ANL, AW, AWL Series

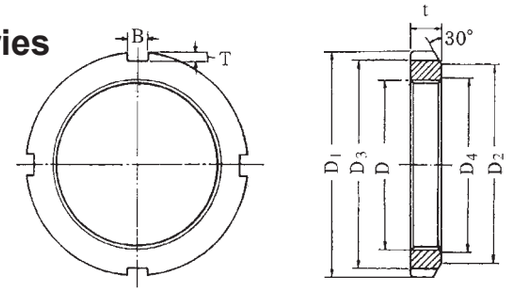

Lock Nut and Lock Washer

Series AN		Dimensions (mm)										ANL Series		Thread (Diameter, D x Pitch)
Lock Nut Number	Lock Washer Number	AN series			AN/ANL				ANL Series			Lock Washer Number	Lock Nut Number	
		D_1	D_2	D_3	t	B	T	D_4	D_1	D_2	D_3			
AN 00	AW 00	18	13	14	4	3	2	10.5	–	–	–	–	–	M 10X0.75
01	01	22	17	18	4	3	2	12.5	–	–	–	–	–	12X1
02	02	25	21	21	5	4	2	15.5	–	–	–	–	–	15X1
AN 03	AW 03	28	24	24	5	4	2	17.5	–	–	–	–	–	M 17X1
04	04	32	26	28	6	4	2	20.5	–	–	–	–	–	20X1
05	05	38	32	34	7	5	2	25.8	–	–	–	–	–	25X1.5
AN 06	AW 06	45	38	41	7	5	2	30.8	–	–	–	–	–	M 30X1.5
07	07	52	44	48	8	5	2	35.8	–	–	–	–	–	35X1.5
08	08	58	50	53	9	6	2.5	40.8	–	–	–	–	–	40X1.5
AN 09	AW 09	65	56	60	10	6	2.5	45.8	–	–	–	–	–	M 45X1.5
10	10	70	61	65	11	6	2.5	50.8	–	–	–	–	–	50X1.5
11	11	75	67	69	11	7	3	56	–	–	–	–	–	55X2
AN 12	AW 12	80	73	74	11	7	3	61	–	–	–	–	–	M 60X2
13	13	85	79	79	12	7	3	66	–	–	–	–	–	65X2
14	14	92	85	85	12	8	3.5	71	–	–	–	–	–	70X2
AN 15	AW 15	98	90	91	13	8	3.5	76	–	–	–	–	–	M 75X2
16	16	105	95	98	15	8	3.5	81	–	–	–	–	–	80X2
17	17	110	102	103	16	8	3.5	86	–	–	–	–	–	85X2
AN 18	AW 18	120	108	112	16	10	4	91	–	–	–	–	–	M 90X2
19	19	125	113	117	17	10	4	96	–	–	–	–	–	95X2
20	20	130	120	122	18	10	4	101	–	–	–	–	–	100X2
AN 21	AW 21	140	126	130	18	12	5	106	–	–	–	–	–	M 105X2
22	22	145	133	135	19	12	5	111	–	–	–	–	–	110X2
23	23	150	137	140	19	12	5	116	–	–	–	–	–	115X2
AN 24	AW 24	155	138	145	20	12	5	121	145	133	135	AWL 24	ANL 24	M 120X2
25	25	160	148	150	21	12	5	126	–	–	–	–	–	125X2
26	26	165	149	155	21	12	5	131	155	143	145	AWL 26	ANL 26	130X2
AN 27	AW 27	175	160	163	22	14	6	136	–	–	–	–	–	M 135X2
28	28	180	160	168	22	14	6	141	165	151	153	AWL 28	ANL 28	140X2
29	29	190	171	178	24	14	6	146	–	–	–	–	–	145X2
AN 30	AW 30	195	171	183	24	14	6	151	180	164	168	AWL 30	ANL 30	M 150X2
31	31	200	182	186	25	16	7	156.5	–	–	–	–	–	155X3
32	32	210	182	196	25	16	7	161.5	190	174	176	AWL 32	ANL 32	160X3
AN 33	AW 33	210	193	196	26	16	7	166.5	–	–	–	–	–	M 165X3
34	34	220	193	206	26	16	7	171.5	200	184	186	AWL 34	ANL 34	170X3
36	36	230	203	214	27	18	8	181.5	210	192	194	36	36	180X3
AN 38	AW 38	240	214	224	28	18	8	191.5	220	202	204	AWL 38	ANL 38	M 190X3
40	40	250	226	234	29	18	8	201.5	240	218	224	40	40	200X3

* ANL Nut for H30 Adapter

FBJ®

Lock Nut

AN Series

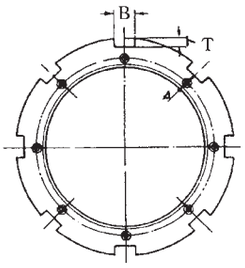

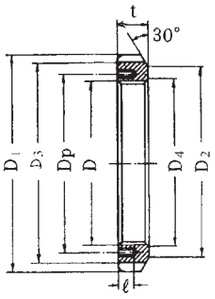

Lock Nut Number	Dimensions (mm)											
										PLATE HOLE		
	Thread (Diameter, D x Pitch)	D_1	D_2	D_3	B	T	D_4	t	Thread (Diameter, D x Pitch)	l	D_1
AN 44	Tr 220X4	280	250	260	20	10	222	32	M 8X1.25	15	238
48	240X4	300	270	280	20	10	242	34	8X1.25	15	258
52	260X4	330	300	306	24	12	262	36	10X1.5	18	281
AN 56	Tr 280X4	350	320	326	24	12	282	38	M 10X1.5	18	301
60	300X4	380	340	356	24	12	302	40	10X1.5	18	326
64	320X5	400	360	376	24	12	322.5	42	10X1.5	18	345
AN 68	Tr 340X5	440	400	410	28	15	342.5	55	M 12X1.75	21	372
72	360X5	460	420	430	28	15	362.5	58	12X1.75	21	392
76	380X5	490	450	454	32	18	382.5	60	12X1.75	21	414
AN 80	Tr 400X5	520	470	484	32	18	402.5	62	M 16X2	27	439
84	420X5	540	490	504	32	18	422.5	70	16X2	27	459
88	440X5	560	510	520	36	20	442.5	70	16X2	27	477

Lock Nut

ANL* Series

ANL 44	Tr 220X4	260	242	242	20	9	222	30	M 6X1	12	229
48	240X4	290	270	270	20	10	242	34	8X1.25	15	253
52	260X4	310	290	290	20	10	262	34	8X1.25	15	273
ANL 56	Tr 280X4	330	310	310	24	10	282	38	M 8X1.25	15	293
60	300X4	360	336	336	24	12	302	42	8X1.25	15	316
64	320X5	380	356	356	24	12	322.5	42	8X1.25	15	335
ANL 68	Tr 340X5	400	376	376	24	12	342.5	45	M 8X1.25	15	355
72	360X5	420	394	394	28	13	362.5	45	8X1.25	15	374
76	380X5	450	422	422	28	14	382.5	48	10X1.5	18	398
ANL 80	Tr 400X5	470	442	442	28	14	402.5	52	M 10X1.5	18	418
84	420X5	490	462	462	32	14	422.5	52	10X1.5	18	438
88	440X5	520	490	490	32	15	442.5	60	12X1.75	21	462
ANL 92	Tr 460X5	540	510	510	32	15	462.5	60	M 12X1.75	21	482
96	480X5	560	530	530	36	15	482.5	60	12X1.75	21	502

* ANL Nut for H30 Adapter

MB Bushing

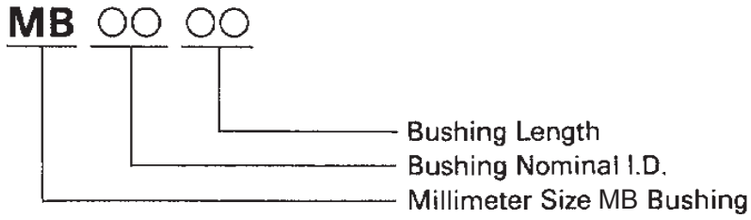

Bushing I.D	Tolerances		Bushing Number and Bushing Length (mm)								
	Housing Dia.	Shaft Dia.	3	4	5	6	7	8	10	12	15
3	5H7 $^{+0.012}_{0}$	3 $^{-0.025}_{-0.035}$	MB0303	MB0304	MB0305	MB0306					
4	6 ”	4 $^{-0.025}_{0.037}$		MB0404		MB0406		MB0408			
5	7H7 $^{+0.015}_{0}$	5 ”		MB0504	MB0505	MB0506		MB0508			
6	8 ”	6 ”			MB0605	MB0606	MB0607	MB0608	MB0610		
7	9 ”	7 $^{-0.025}_{-0.040}$			MB0705		MB0707		MB0710	MB0712	
8	10 ”	8 ”			MB0805	MB0806	MB0807	MB0808	MB0810	MB0812	
9	11H7 $^{+0.018}_{0}$	9 ”							MB0910		
10	12 ”	10 ”				MB1006	MB1007	MB1008	MB1010	MB1012	MB1015
12	14 ”	12 $^{-0.025}_{-0.043}$				MB1206		MB1208	MB1210	MB1212	MB1215
13	15 ”	13 ”						MB1308	MB1310		MB1315
14	16 ”	14 ”							MB1410	MB1412	MB1415
15	17 ”	15 ”						MB1508	MB1510	MB1512	MB1515
16	18 ”	16 ”							MB1610	MB1612	MB1615
17	19H7 $^{+0.021}_{0}$	17 ”									MB1715
18	20 ”	18 ”							MB1810	MB1812	MB1815
19	22 ”	19 $^{-0.025}_{-0.046}$							MB1910		MB1915
20	23 ”	20 ”							MB2010	MB2012	MB2015
22	25 ”	22 ”							MB2210	MB2212	MB2215
24	27 ”	24 ”									MB2415
25	28 ”	25 ”							MB2510	MB2512	MB2515
26	30 ”	26 ”									MB2615
28	32H7 $^{+0.025}_{0}$	28 ”								MB2812	MB2815
30	34 ”	30 ”								MB3012	MB3015
31	35 ”	31 $^{-0.025}_{-0.050}$									MB3115
32	36 ”	32 ”									
35	39 ”	35 ”								MB3512	
38	42 ”	38 ”									
40	44 ”	40 ”								MB4012	MB4015
45	50 ”	45 ”									
50	55H7 $^{+0.030}_{0}$	50 ”									
55	60 ”	55 $^{-0.025}_{-0.055}$									
60	65 ”	60 ”									
65	70 ”	65 $^{+0.035}_{+0.005}$									
70	75 ”	70 ”									
75	80 ”	75 ”									
80	85H7 $^{+0.035}_{0}$	80 ”									
85	90 ”	85 $^{+0.035}_{0}$									
90	95 ”	90 ”									
100	105 ”	100 ”									
110	115 ”	110 ”									
120	125H7 $^{+0.040}_{0}$	120 ”									
130	135 ”	130 $^{+0.035}_{0.005}$									
140	145 ”	140 ”									
150	155 ”	150 ”									
160	165 ”	160 ”									

Note: For standard bushing, min. clearance is 0.025mm.

FBJ®

MB Bushing

Bushing Number and Bushing Length (mm)											
20	25	30	35	40	50	60	70	80	90	95	100
MB1020											
MB1220											
MB1420											
MB1520	MB1525										
MB1620	MB1625										
MB1820	MB1825										
MB2020	MB2025	MB2030									
MB2220	MB2225										
MB2420	MB2425	MB2430									
MB2520	MB2525	MB2530	MB2535								
MB2620		MB2630									
MB2820	MB2825	MB2830									
MB3020	MB3025	MB3030	MB3035	MB3040							
	MB3125			MB3140							
MB3220	MB3225	MB3230		MB3240							
MB3520	MB3525	MB3530	MB3535	MB3540	MB3550						
MB3820	MB3825	MB3830	MB3835	MB3840							
MB4020	MB4025	MB4030	MB4035	MB4040	MB4050						
MB4520	MB4525	MB4530	MB4535	MB4540	MB4550						
MB5020	MB5025	MB5030	MB5035	MB5040	MB5050	MB5060					
	MB5525	MB5530	MB5535	MB5540	MB5550	MB5560					
		MB6030	MB6035	MB6040		MB6060					
		MB6530		MB6540	MB6550	MB6560					
		MB7030	MB7035	MB7040	MB7050	MB7060		MB7080			
		MB7530	MB7535	MB7540	MB7550	MB7560		MB7580			
				MB8040	MB8050	MB8060		MB8080			
				MB8540	MB8550	MB8560		MB8580			
				MB9040		MB9060			MB9090		
					MB10050		MB10070			MB10095	
					MB11050		MB11070			MB11095	
					MB12050		MB12070			MB12095	
					MB13050			MB13080			
					MB14050			MB14080			MB140100
					MB15050			MB15080			MB150100
					MB16050			MB16080			MB160100

MB Bushing-Flanged

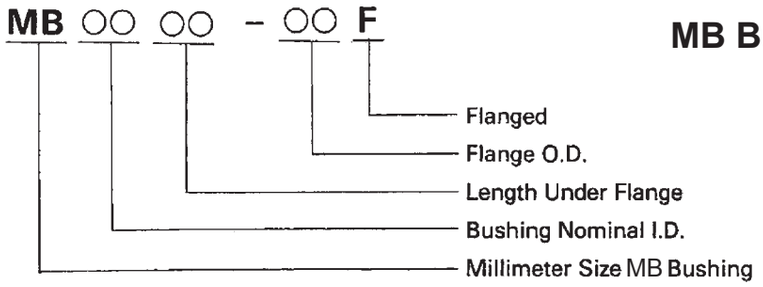

Bushing		Tolerances		Thickness		Bushing Number and Bushing Length (mm)				
I.D.	Flanged O.D.	Housing Dia.	Shaft Dia.	Bushing T1	Flanged T2	3	4	5	6	7
3	7	4.6H7 $^{+0.012}_{0}$	3 $^{-0.025}_{-0.035}$	0.8 $^{0}_{-0.25}$	0.8 $^{0}_{-0.15}$	MB0303-7F				
4	9	5.6	4 $^{-0.025}_{-0.037}$				MB0404-9F			
5	10	7H7 $^{+0.015}_{0}$	5	1.0 $^{0}_{-0.25}$	1.0 $^{0}_{-0.15}$		MB0504-10F	MB0505-10F		
6	12	8	6					MB0605-12F	MB0606-12F	MB0607-12F
7	13	9	7 $^{-0.025}_{-0.040}$					MB0705-13F		MB0707-13F
8	15	10	8						MB0806-15F	
10	18	12H7 $^{+0.018}_{0}$	10						MB1006-18F	MB1007-18F
12	20	14	12 $^{-0.025}_{-0.430}$						MB1206-20F	
14	22	16	14							
15	23	17	15							
16	24	18	16							
18	26	20H7 $^{+0.021}_{0}$	18							
20	31	23	20 $^{-0.025}_{-0.046}$	1.5 $^{0}_{-0.030}$	1.5 $^{0}_{-0.15}$					
22	33	25	22							
24	35	27	24							
25	36	28	25							
26	38	30	26	2.0 $^{0}_{-0.030}$	2.0 $^{0}_{-0.15}$					
28	40	32H7 $^{+0.025}_{0}$	28							
30	42	34	30							
31	45	35	31 $^{-0.025}_{-0.050}$							
32	46	36	32							
35	49	39	35							
38	52	42	38							
40	54	44	40							
45	60	50	45	2.5 $^{0}_{-0.040}$	2.5 $^{0}_{-0.15}$					
50	65	55H7 $^{+0.030}_{0}$	50							
55	70	60	55 $^{-0.025}_{-0.055}$							
60	75	65	65							

FBJ®

MB Bushing-Flanged

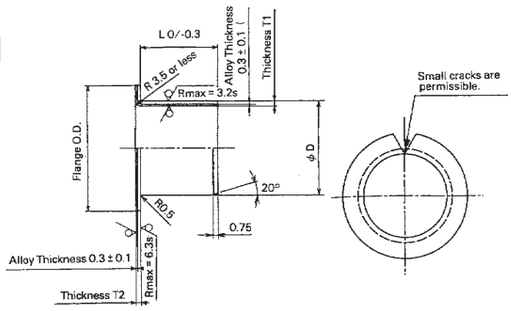

Bushings of O.D. 10mm or under or bushing length 7mm or under are not chamfered.

Bushing Number and Bushing Length (mm)									
8	10	12	15	20	25	30	40	50	60
MB0608-12F	MB0610-12F								
	MB0710-13F	MB0712-13F							
MB0808-15F	MB0810-15F	MB0812-15F							
MB1008-18F	MB1010-18F	MB1012-18F	MB1015-18F						
MB1208-20F	MB1210-20F	MB1212-20F	MB1215-20F	MB1220-20F					
	MB1410-22F	MB1412-22F	MB1415-22F	MB1420-22F					
	MB1510-23F	MB1512-23F	MB1515-23F	MB1520-23F	MB1525-23F				
	MB1610-24F	MB1612-24F	MB1615-24F	MB1620-24F	MB1625-24F				
	MB1810-26F	MB1812-26F	MB1815-26F	MB1820-26F	MB1825-26F				
	MB2010-31F	MB2012-31F	MB2015-31F	MB2020-31F	MB2025-31F	MB2030-31F			
	MB2210-33F	MB2212-33F	MB2215-33F	MB2220-33F	MB2225-33F				
			MB2415-35F	MB2420-35F	MB2425-35F	MB2430-35F			
	MB2510-36F	MB2512-36F	MB2515-36F	MB2520-36F	MB2525-36F	MB2530-36F			
			MB2615-38F	MB2620-38F					
		MB2812-40F	MB2815-40F	MB2820-40F		MB2830-40F			
		MB3012-42F	MB3015-42F	MB3020-42F	MB3025-42F	MB3030-42F	MB3040-42F		
					MB3125-45F				
				MB3220-46F	MB3225-46F	MB3230-46F			
		MB3512-49F		MB3520-49F	MB3525-49F	MB3530-49F	MB3540-49F	MB3550-49F	
				MB3820-52F		MB3830-52F	MB3840-52F		
		MB4012-54F		MB4020-54F	MB4025-54F	MB4030-54F	MB4040-54F	MB4050-54F	
				MB4520-60F	MB4525-60F	MB4530-60F	MB4540-60F	MB4550-60F	
				MB5020-65F		MB5030-65F	MB5040-65F		MB5060-65F
						MB5530-70F	MB5540-70F		MB5560-70F
						MB6030-75F	MB6040-75F		MB6060-75F

CONVERSION GUIDE

FBJ®

CONVERSION FORMULAE

LENGTH

To convert	*Multiply by*
milli-inches into micrometres	25.4
inches into millimetres	25.4
inches into centimetres	2.54
inches into metres	0.0254
feet into millimetres	304.8
feet into centimetres	30.48
feet into metres	0.3048
yards into metres	0.9144
fathoms into metres	1.8288
chains into metres	20.1168
furlongs into metres	201.168
miles, statute into kilometres	201.168
miles, nautical into kilometres	1.852

VOLUME & CAPACITY

To convert	*Multiply by*
cubic inches into cubic centimetres	16.387064
cubic inches into litres	0.016387
cubic feet into cubic metres	0.0283168
cubic feet into litres	28.316847
cubic yards into cubic metres	0.7645549
UK pints into litres	0.5682613
UK quarts into litres	1.1365225
UK gallons into litres	4.54609
UK gallons into cubic metres	0.0045461
UK fluid ounces into cubic centimetres	28.413063

AREA

To convert	*Multiply by*
square inches into square millimetres	645.16
square inches into square centimetres	6.4516
square feet into square centimetres	929.0304
square feet into square metres	0.092903
square yards into square metres	0.836127
square yards into acres	0.083613
acres into square metres	4046.8564
acres into hectares	0.4046856
square miles into square kilometres	2.589988

MASS

To convert	*Multiply by*
grains into milligrams	64.79891
grains into metric carats	0.323995
grains into grams	0.064799
pennyweights into grams	1.555174
ounces into grams	28.349523
ounces troy into grams	31.103477
ounces into kilograms	0.0283495
pounds into kilograms	0.4535924
stones into kilograms	6.3502932
hundredweights into kilograms	50.802345
tons into kilograms	1016.0469
tons into metric tonnes	1.01605
tahils into grams	37.799
kati into kilograms	0.60479

POWER

To concert	*Multiply by*
foot pounds-force per second into watts	1.35582
horsepower into watts	745.7
foot pounds-force per second into kilowatts	0.001356
horsepower into kilowatts	0.7457
horsepower into metric horsepower	1.01387

VELOCITY

To convert	*Multiply by*
feet per second into centimetres per second	30.48
feet per second into metres per second	0.3048
miles per hour into kilometres per hour	1.609344

FORCE

To convert	*Multiply by*
pounds force into newtons	4.44822
poundals into newtons	0.138255

TEMPERATURE

To convert from degrees Fahrenheir to Centigrade:

$(X^{o}F - 32) \times \frac{5}{9} = Y^{o}C$

To convert from degrees Centigrade to Fahrenheit:

$(Y^{o}C \times \frac{9}{5}) + 32 = X^{o}F$

MOTORING CONVERSIONS

These Conversion charts indicate relative values. They are intended only as a guide and should not be used to calculate higher values where more than three decimal places would be needed.

FUELCONSUMPTION

L/100km	=	mile/gal	mile/gal	=	L/100km
6.0	=	47.06	10	=	28.248
7.0	=	40.34	12	=	23.540
8.0	=	35.30	14	=	20.177
8.5	=	33.22	16	=	17.655
9.0	=	31.38	18	=	15.693
9.5	=	29.73	20	=	14.124
10.0	=	28.24	22	=	12.840
10.5	=	26.90	24	=	11.710
11.0	=	25.67	26	=	10.864
11.5	=	24.56	28	=	10.088
12.0	=	23.53	30	=	9.416
12.5	=	22.59	32	=	8.827
13.0	=	21.72	34	=	8.308
13.5	=	20.92	36	=	7.846
14.0	=	20.17	38	=	7.433
14.5	=	19.48	40	=	7.062
15.0	=	18.83	42	=	6.726
16.0	=	17.65	43	=	6.561
17.0	=	16.61	44	=	6.420
18.0	=	15.69	45	=	6.279
19.0	=	14.86	46	=	6.137
20.0	=	14.12	47	=	5.996
21.0	=	13.44	48	=	5.855
22.0	=	12.83	49	=	5.713
23.0	=	12.27	50	=	5.572

TYREPRESSURE

lbf/in^2	=	kPa	kPa	=	lbf/in^2
25	=	172.36	155	=	22.48
26	=	179.26	160	=	23.20
27	=	186.16	165	=	23.93
28	=	193.05	170	=	24.66
29	=	199.95	175	=	25.38
30	=	206.84	180	=	26.11
31	=	213.74	185	=	26.83
32	=	220.63	190	=	27.56
33	=	227.53	195	=	28.28
34	=	234.42	200	=	29.00
35	=	241.31	205	=	29.73

SPEED

km/h	=	mile/h	mile/h	=	km/h
5.00	=	3.12	10	=	16
10.00	=	6.25	15	=	24
15.00	=	9.37	20	=	32
20.00	=	12.50	25	=	40
25.00	=	15.62	30	=	48
30.00	=	18.75	35	=	56
35.00	=	21.87	40	=	64
40.00	=	25.00	45	=	72
45.00	=	28.12	50	=	80
50.00	=	31.25	55	=	88
55.00	=	34.37	60	=	96
60.00	=	37.50	65	=	104
65.00	=	40.62	70	=	112
70.00	=	43.75	75	=	120
75.00	=	46.87	80	=	128
80.00	=	50.00	85	=	136
85.00	=	53.12	90	=	144
90.00	=	56.25	95	=	152
95.00	=	59.37	100	=	160
100.00	=	62.50	105	=	168
105.00	=	65.62	110	=	176
110.00	=	68.75	115	=	184
115.00	=	71.87	120	=	192
120.00	=	75.00	125	=	200
130.00	=	81.25	130	=	208
140.00	=	87.50	135	=	216
150.00	=	93.75	140	=	224

FBJ®

IMPERIAL SYSTEM

LENGTH

1000 milli-inches	=	1 inch
12 inches	=	1 foot
3 feet	=	1 yard
5.5 yards	=	1 rod
220 yards	=	1 furlong
40 rods	=	1 furlong
5280 feet	=	1 mile
1760 yards	=	1 mile
8 furlongs	=	1 mile
3 miles	=	1 league
25 links	=	1 rod
100 links	=	1 chain
66 feet	=	1 chain
22 yards	=	1 chain
4 rods	=	1 chain

LENGTH (NAUTICAL)

6 feet	=	1 fathom
100 fathoms (approx)	=	1 cable length
10 cable lengths	=	1 nautical mile

AREA

144 sq ins	=	1 sq foot
9 sq feet	=	1 sq yard
30.25 sq	=	1 sq rod
484 sq yds	=	1 sq chain
1210 sq yds	=	1 rood
4840 sq yds	=	1 acre
160 sq rods	=	1 acre
640 acres	=	1 sq mile

AVOIRDUPOIS WEIGHT

437.5 grains	=	1 ounce
16 drams	=	1 ounce
7000 grains	=	1 pound
256 drams	=	1 pound
16 ounces	=	1 pound
14 pounds	=	1 stone
2 stones	=	1 quarter
100 pounds	=	1 cental
112 pounds	=	1 cwt
4 quarters	=	1 cwt
35840 ounces	=	1 ton
2240 pounds	=	1 ton
20 cwts	=	1 ton

APOTHECARIES'WEIGHT

20 grains	=	1 scuple
3 scuples	=	1 dram
8 drams	=	1 ounce
12 ounces	=	1 pound

Ounce and pound are the same as in Troy Weight.

TROY WEIGHT

24 grains	=	1 pwt
20 pwt	=	1 ounce
12 ounces	=	1 pound

Used for weighting gold, silver and jewels.

VOLUME

1728 cu ins	=	1 cu foot
46656 cu ins	=	1 cu yard
27 cu ins	=	1 cu yard

CAPACITY

8 fluid drams	=	1 fluid ounce
5 fluid ounces	=	1 gill
20 fluid ounces	=	1 pint
4 gills	=	1 pint
40 fluid ounces	=	1 quart
2 pints	=	1 quart
160 fluid ounces	=	1 gallon
8 pints	=	1 gallon
4 quarts	=	1 gallon
2 gallons	=	1 peck
4 pecks	=	1 bushel
8 gallons	=	1 bushel
64 gallons	=	1 quarter
31 1/2 gallons	=	1 barrel
2 barrels	=	1 hogshead

MARINERS' MEASURE

6 feet	=	1 fathom
120 fathoms	=	1 cable length
7 1/2 cable lengths	=	1 mile
5,280.2 feet	=	1 statute mile
6,080.2 feet	=	1 nautical mile

SURVEYORS' MEASURE

7.92 inches	=	1 link
25 links	=	1 rod
4 rods	=	1 chain
10 sq chains or 160 sq rods	=	1 acre
640 acres	=	1 square mile
36 sq miles (6 miles sq)	=	1 township

METRIC SYSTEM

LENGTH

1000	picometres	=	1 nanometre
1000	nanometres	=	1 micrometre
1000	micrometres	=	1 millimetre
10	millimetres	=	1 centimetre
100	millimetres	=	1 decimetre
10	centimetres	=	1 decimetre
1000	millimetres	=	1 metre
100	millimetres	=	1 metre
10	decimetres	=	1 metre
100	metres	=	1 hectometre
1000	metres	=	1 kilometre
1852	nautical metres	=	1 international nautical mile

AREA

100	sq millimetres	=	1 sq centimetre
100	sq centimetres	=	1 sq decimetre
10 000	sq centimetres	=	1 sq metre
100	sq decimetres	=	1 sq metre
10 000	sq metres	=	1 hectare
100	hectares	=	1 sq kilometre

MASS

1000	micrograms	=	1 milligram
200	milligrams	=	1 metric carat
1000	milligrams	=	1 gram
5	metric carats	=	1 gram
1000	grams	=	1 kilogram
1000	kilograms	=	1 megagram
		=	1 tonne

ENERGY (WORK & HEAT)

1000	millijoules	=	1 joule
1000	joules	=	1 kilojoule
1000	kilojoules	=	1 megajoule
3.6	megajoules	=	1 kilowatt hour
1000	megajoules	=	1 gigajoule
1000	gigajoules	=	1 terajoule

TIME

1000 nanoseconds	=	1 microsecond
1000 microseconds	=	1 millisecond
1000 milliseconds	=	1 second
1000 seconds	=	1 kilosecond

VELOCITY

3.6	kilometres per hour	=	1 metre per second
3600	kilometres per hour	=	1 kilometre per second

ELECTRICITY & MAGNETISM

1000 picoamperes	=	1 nanoampere
1000 nanoamperes	=	1 microampere
1000 microamperes	=	1 milliampere
1000 milliamperes	=	1 ampere
1000 amperes	=	1 kiloampere
1000 milliculombs	=	1 coulomb
1000 coulombs	=	1 kilocoulomb
1000 microvolts	=	1 millivolt
1000 millivolts	=	1 volt
1000 volts	=	1 kilovolt
1000 kilovolts	=	1 megavolt
1000 microhms	=	1 milliohm
1000 milliohms	=	1 ohm
1000 ohms	=	1 kilohm
1000 kilohms	=	1 megohm
1000 megohms	=	1 gigohm
1000 millisiemens	=	1 siemen
1000 millihenrys	=	1 henry
1000 milliteslas	=	1 tesla

POWER

1000 microwatts	=	1 milliwatt
1000 milliwatts	=	1 watt
1000 watts	=	1 kilowatt
1000 kilowatts	=	1 megawatt
1000 megawatts	=	1 gigawatt
1000 gigawatts	=	1 terawatt

VOLUME & CAPACITY

1000 cu millimetres	=	1 cu millimetre
1000 centimetres	=	1 cu decimetre
1000 cu decimetres	=	1 cu metre
1 millilitre	=	1 centimetre
10 millilitres	=	1 centilitre
10 centilitres	=	1 decilitre
1000 millilitres	=	1 litre
100 centilitres	=	1 litre
100 litres	=	1 hectolitre
1000 litres	=	1 kilolitre
	=	1 cu metre
10 hectolitres	=	1 kilolitre

PRESSURE AND STRESS

1000 micropascals	=	1 millipascal
1000 millipascals	=	1 pascal
100 pascals	=	1 millibar
1000 pascals	=	1 kilopascal
10 millibars	=	1 kilopascal
1000 kilopascals	=	1 megapascal
1000 megapascals	=	1 gigiapascal

DENSITY & CONCENTRATION

1 gram per cu metre	=	1 milligram per cu decimetre
1000 milligrams per cu decimetre	=	1 gram per cu decimetre
	=	1 kilogram per cu metre
1000 kilograms per metre	=	1 tonne per cu metre
	=	1 kilogram per cu decimetre

FORCE

1000 micronewtons	=	1 micronewton
1000 millinewtons	=	1 newton
1000 newtons	=	1 kilonewton
1000 kilonewtons	=	1 meganewton

FBJ®

Conversion Table
Inch ~ mm

inch										
Fraction	Decimal	0”	1”	2”	3”	4”	5”	6”	7”	8”
	.0		25.4	50.8	76.2	101.6	127	152.4	177.8	203.2
1/64	.015625	0.3969	25.7969	51.1969	75.5969	101.9969	127.3969	152.7969	178.1969	203.5969
1/32	.03125	0.7938	26.1938	51.5938	76.9938	102.3938	127.7938	153.1938	178.5938	203.9938
3/64	.046875	1.1906	26.5906	51.9906	77.3906	102.7906	128.1906	153.5906	178.9906	204.3906
1/16	.0625	1.5875	26.9875	52.3875	77.7875	103.1875	128.5875	153.9875	179.3875	204.7875
5/64	.078125	1.9844	27.3844	52.7844	78.1844	103.5844	128.9844	154.3844	179.7844	205.1844
3/32	.09375	2.3813	27.7813	53.1812	78.5812	103.9812	129.3812	154.7812	180.1812	205.5812
7/64	.109375	2.7781	28.1781	53.5781	78.9781	104.3781	129.7781	155.1781	180.5781	205.9781
1/8	.125	3.175	28.575	53.975	79.375	104.775	130.175	155.575	180.975	206.375
9/64	.140625	3.5719	28.9719	54.3719	79.7719	105.1719	130.5719	155.9719	181.3719	206.7719
5/32	.15625	3.9688	29.3688	54.7688	80.1688	105.5688	130.9688	156.3688	181.7688	207.1688
11/64	.171875	4.3656	29.7656	55.1656	80.5656	105.9656	131.3656	156.7656	182.1656	207.5656
3/16	.1875	4.7625	30.1625	55.5625	80.9625	106.3625	131.7625	157.1625	182.5625	207.9625
13/64	.203125	5.1594	30.5594	55.9594	81.3594	106.7594	132.1594	157.5594	182.9594	208.3594
7/32	.21875	5.5562	30.9562	56.3562	81.7562	107.1562	132.5562	157.9562	183.3562	208.7562
15/64	.234375	5.9531	31.3531	56.7531	82.1531	107.5531	132.9531	158.3531	183.7531	209.1531
1/4	.250000	6.3500	31.7500	57.1500	82.5500	107.9500	133.3500	158.7500	184.1500	209.5500
17/64	.265625	6.7469	32.1469	57.5469	82.9469	108.3469	133.7469	159.1469	184.5469	209.9469
9/32	.28125	7.1438	32.5438	57.9438	83.3438	108.7438	134.1438	159.5438	184.9438	210.3438
19/64	.296875	7.5406	32.9406	58.3406	83.7406	109.1406	134.5406	159.9406	185.3406	210.7406
5/16	.3125	7.9375	33.3375	58.7375	84.1375	109.5375	134.9375	160.3375	185.7375	211.1375
21/64	.328125	8.3344	33.7344	59.1344	84.5344	109.9344	135.3344	160.7344	186.1344	211.5344
11/32	.34375	8.7312	34.1312	59.5312	84.9312	110.3312	135.7312	161.1312	186.5312	211.9312
23/64	.359375	9.1281	34.5281	59.9281	85.3281	110.7281	136.1281	161.5281	186.9281	212.3281
3/8	.375	9.525	34.925	60.325	85.725	111.125	136.525	161.925	187.325	212.725
25/64	.390625	9.9219	35.3219	60.7219	86.1219	111.5219	136.9219	162.3219	187.7219	213.1219
13/32	.40625	10.3188	35.7188	61.1188	86.5188	111.9188	137.3188	162.7188	188.1188	213.5188
27/64	.471875	10.7156	36.1151	61.5156	86.9156	112.3156	137.7156	163.1156	188.5156	213.9156
7/16	.4375	11.1125	36.5125	61.9125	87.3125	112.7125	138.1125	163.5125	188.9125	214.3125
29/64	.453125	11.5094	36.9094	62.3094	87.7094	113.1094	138.5094	163.9094	189.3094	214.7094
15/32	.46875	11.9062	37.3062	62.7062	88.1062	113.5062	138.9062	164.3062	189.7062	215.1062
31/64	.484375	12.3031	37.7031	63.1031	88.5031	113.9031	139.3031	164.7031	190.1031	215.5031
1/2	.5	12.7	38.1	63.5	88.9	114.3	139.7	165.1	190.5	215.9
33/64	.515625	13.0969	38.4969	63.8969	89.2969	114.6969	140.0969	165.4969	190.8969	216.2969
17/32	.53125	13.4838	38.8938	64.2938	89.6938	115.0938	140.4938	165.8938	191.2938	216.6938
35/64	.546875	13.8906	39.2906	64.6906	90.0906	115.4906	140.8906	166.2906	191.6906	217.0906
9/16	.5625	14.2875	39.6875	65.0875	90.4875	115.8875	141.2875	166.6875	192.0875	217.4875
37/64	.578125	14.6844	40.844	65.4844	90.8844	116.2844	141.6844	167.0844	192.4844	217.8844
19/32	.59375	15.0812	40.4812	65.8812	91.2812	116.6812	142.0812	167.4812	192.8812	218.2812
39/64	.609375	15.4781	40.8781	66.2781	91.6781	117.0781	142.4781	167.8781	193.2781	218.6781
5/8	.625	15.875	41.275	66.6750	92.075	117.475	142.875	168.275	193.675	219.075
41/64	.640625	16.2719	41.6719	67.0719	92.4719	117.8719	143.2719	168.6719	194.0719	219.4719
21/32	.65625	16.6688	42.0688	67.4688	92.8688	118.2688	143.6688	169.0688	194.4688	219.8688
43/64	.671875	17.0656	42.4656	67.8656	93.2656	118.6656	144.0659	169.4656	194.8656	220.2656
11/16	.6875	17.4625	42.8625	68.2625	93.6625	119.0625	144.4625	169.8625	195.2625	220.6625
45/64	.703125	17.8594	43.2594	68.6594	94.0594	119.4594	144.8594	170.2594	195.6594	221.0594
23/32	.71875	18.2562	43.6562	69.0562	94.4562	119.8562	145.2562	170.6562	196.0562	221.4562
47/64	.734375	18.6531	44.0531	69.4531	94.8531	120.2531	145.6531	171.0531	196.4531	221.8531
3/4	.75	19.05	44.45	69.85	95.25	120.65	146.0500	171.45	196.85	222.25
49/64	.765625	19.4469	44.8469	70.2469	95.6469	121.0469	146.4469	171.8469	197.2469	222.6469
25/32	.78125	19.8438	45.2438	70.6438	96.0438	121.4438	146.8438	172.2438	197.6438	223.0438
51/64	.796875	20.2406	45.6406	71.0406	96.4406	121.8406	147.2406	172.6406	198.0406	223.4405
13/16	.8125	20.6375	46.0375	71.4375	96.8375	122.2375	147.6375	173.0375	198.4375	223.8375
53/64	.828125	21.0344	46.4344	71.8344	97.2344	122.6344	148.0344	173.4344	198.8344	224.2344
27/32	.84375	21.4312	46.8312	72.2312	97.6312	123.0312	148.4312	173.8312	199.2312	224.6312
55/64	.859375	21.8281	47.2281	72.6281	98.0281	123.4281	148.8281	174.2281	199.6281	225.0281
7/8	.875	22.225	47.625	73.025	98.425	123.825	149.225	174.625	200.025	225.425
57/64	.890625	22.6219	48.0219	73.4219	98.8219	124.2219	149.6219	175.0219	200.4219	225.8219
29/32	.90625	23.0188	48.4188	73.8188	99.2188	124.6188	150.0188	175.4188	200.8188	226.2188
59/64	.921875	23.4156	48.8156	74.2156	99.6156	125.0156	150.4156	175.8156	201.2156	226.6156
15/16	.9375	23.8125	49.2125	74.6125	100.0125	125.4125	150.8125	176.2125	201.6125	227.0125
61/64	.953125	24.2094	49.6094	75.0094	100.4094	125.8094	151.2094	176.6094	202.0094	227.4094
31/32	.968759	24.6062	50.0062	75.4062	100.8062	126.2062	151.6062	177.0062	202.4062	227.8062
63/64	.984375	25.0031	50.4031	75.8031	101.2031	126.6031	152.0031	177.4031	202.8031	228.2031

FBJ®

Notes

Notes

For more information, please contact:

FRABEX

FRABEX GmbH.
Leharhof 2
7400 Oberwart
Austria

phone/fax	+43-3352-38071
mobile	+43-676-637 2335
mobile	+43-676-637 2239
email	info@frabex.com

www.frabex.com

FBJ-003/13